VOL. 15 PROTECTIVE WRAPPER NO. 86

Woodsmith®

This protective wrapper
is designed to save your issue from
damage while it's in the mail.

If your issue arrives damaged,
call us at 1-800-333-5075 for a
replacement copy.

VOL. 15 NOTES FROM THE SHOP NO. 86

Woodsmith®

No. 86 April, 1993

Woodsmith®

Editor **Donald B. Peschke**
Managing Editor **Douglas L. Hicks**
Assistant Editors **James M. Dolan**, **Philip A. Totten**, **Jonathan Garbison**

Creative Director **Ted Kralicek**
Art Director **Rod Stoakes**
Senior Illustrators **David Kreyling**, **Chris Glowacki**
Illustrators **Dirk Ver Steeg**, **Cinda Shambaugh**
Photographer **Crayola England**
Design Director **Ken Munkel**
Senior Designer **Jan Hale Svec**
Designer **Kent Welsh**
Shop Manager **Steve Curtis**

Circulation Director **Liz Bredeson**
Subscription Manager **Sandy Baum**
Circulation Analyst **Rod Cain**
Newsstand Sales **Kent A. Buckton**

PUBLISHING SERVICES
Associate Editor **Gordon C. Gaippe**
Sr. Graphic Artist **Robert H. Whitmer**
Illustrator **Mark Higdon**

CORPORATE SERVICES
Controller **Paul E. Gray**
Accounting **Laura Thomas**
Bookkeeping **Julianne Spears**
Information Serv. Mgr. **Joyce Moore**
Network Administrator **Douglas M. Lidster**
Administrative Assts. **Cheryl A. Scott**, **Julia Fish**
Receptionist **Jeanne Johnson**
Building Maintenance **Ken Griffith**, **Archie Krause**

WOODSMITH MAIL ORDER
Marketing Director **Robert Murry**
Art Director **Cindy Jackson**
Catalog Products Mgr. **Bob Baker**
Project Supplies **Linda Jones**
Technical Support **Jeff Janes**
Systems Operator **Linda Morrow**
Receptionist **Keri Lee**

CUSTOMER SERVICE
Jennie Enos (Supr.), Jennifer Murphy, Joy Johnson, Sara Kono, Ami Blanshan, Anna Cox, Chris Lo

SHIPPING DEPARTMENT
Jerry Carson (Supervisor), Gloria Sheehan, Donnie McVey, Chuck Carlson, Sylvia Carey

WOODSMITH STORE
Dave Larson (Manager), Wendell Stone, Vicki Edwards, Dominic Bazzocco, Steve Johnson

Woodsmith® (ISSN 0164-4114) is published bimonthly (Feb., April, June, Aug., Oct., Dec.) by Woodsmith Corporation, 2200 Grand Ave., Des Moines, IA 50312. Printed in U.S.A.
Woodsmith® is a registered trademark of Woodsmith Corp. Copyright© **1993** Woodsmith Corporation. All rights reserved.
Subscriptions: Single copy: $3.95. One year subscription (6 issues), $17.95. Two years (12 issues), $31.95. (Canada/Foreign add $5 per year, U.S. funds.)
Second Class Postage Paid at Des Moines, IA and at additional offices.
Postmaster: Send change of address to *Woodsmith*, Box 10718, Des Moines, IA 50350.
Subscription Questions? Call 1-800-333-5075, 8:00 am to 5:00 pm, Central Time, weekdays.

EDITOR'S COLUMN

Sawdust

Shortly after we approved the working drawings for the Slant Front Desk for this issue, I asked Steve Curtis, our shop manager, to pick up the lumber. As usually happens at this point, Steve got this eager look in his eyes — then disappeared with the company truck.

A few hours later Steve reappeared with a load of wood. "Not just any wood," he pointed out, "Native Iowa Cherry." It was some of the most beautiful cherry I've seen. Ten-foot-long boards, 6" to 10" wide. Very little sapwood. Perfect for the desk.

Where did he find this great wood? Seems he knows a fellow who runs a little sawmill. And Steve has a knack for showing up when the best stock comes out of the kiln.

Okay, Don, but I don't live in Iowa, and I don't know any sawyers. How can I get my projects to look as nice as your desk?

Although the wood is important, what you do with it is more important. You can make a lot of good things happen depending on how you match and lay out the pieces.

GRAIN PATTERN & APPEARANCE. When picking out wood for a project, I look for pieces with similar color and grain patterns. I may have to go through a whole stack of boards before I've chosen the ones to use.

Occasionally, I've found two boards from the same tree — they have the same color and grain pattern. If glued up together, the panel will have a consistent appearance.

When gluing up panels, I try to hide the joints by matching the grain patterns. Nothing will emphasize an edge-glued joint more than a piece with straight grain next to a piece with figured grain.

CHOOSING PIECES. Selecting the stock is only half the battle. You also have to decide which pieces come out of which boards. I concentrate on the most visible ones.

On the desk, the appearance of the door and drawer fronts was the most important part of the project. So I started by laying out those parts on the best wood.

There are also small details that really add to a project. I wanted the grain to run *across* certain parts of the desk. Look at the grain pattern on the drawers of the pigeonhole unit (page 24). All three drawer fronts were cut from one long section of stock.

And the pieces for the ogee bracket feet (page 26) are cut so the grain wraps right around the corner.

Sometimes it's hard to keep all these pieces organized when it comes time for assembly. But close attention to details makes the difference between a nice project and a truly beautiful piece of furniture.

CUTTING DIAGRAMS. This is all good theory, but it gets a little tricky to present in a cutting diagram in *Woodsmith*. We don't know what the wood will look like that you bring home from the lumberyard. Where are the knots? Sapwood? Warp?

So the cutting diagrams are often ideal. You *could* get the pieces out of the boards specified. But you probably won't want to.

Cherry, for example, can have as much as 30% sapwood. So you'll probably want to cut that out and use it for another project where color isn't as important. By the time you finish cutting out the major defects, you won't get all the pieces out of the boards.

So what do you do? I always buy a few extra boards so that I end up with the pieces I want. If I'm taking the time to build an heirloom project, it's worth it to spend an extra twenty or thirty bucks.

NEW FACES. Just about the time Steve was picking up the cherry, Bob Baker came into my office. He was applying for a new position, Catalog Products Manager. Within two minutes I discovered that not only was he a *Woodsmith* subscriber, but he also had a small portable sawmill. (I immediately had all kinds of visions of getting our own cherry logs and Bob cutting them.)

Anyway, Bob told me that his sawmill is powered by a pull-start Volkswagen engine and could cut through 4-foot diameter, 16-foot-long logs. I figured that anybody who could keep that thing going should be able to keep up with the products in our catalog.

Shortly after Bob started work, Cindy Jackson, the Art Director of our mail order catalog, *The Woodsmith Shop*, pointed out another of his qualifications — he was "Outstanding Shop Student" when she graduated from high school with him.

And then it occured to me that somehow or other I forgot to introduce *her* as a "New Face" when she started here over a year ago. It's Cindy's job to lay out the catalog pages and oversee its production.

Laura Thomas has also recently joined us as an accountant. She will help keep track of how I spend the money. (She has her work cut out for her.)

Don

A LOOK INSIDE

Contents

Tips & Techniques 4 *Six tips from fellow woodworkers. 1) Pipe Clamp Spreader. 2) Squaring a Saw Blade. 3) Using Biscuits to Glue Breadboard Ends. 4) Routing Large Half-Rounds. Plus Quick Tips.*

Country Coat Rack 6 *This Coat Rack is like a closet on the wall. It holds outdoor items right where they're needed — near the door.*

Gluing Up Panels 11 *For some projects, solid wood panels are a better choice than plywood. We discuss the best ways to select wood, match grain, and assemble a panel.*

Shop Notes 14 *1) Tall Fence for the Router Table. 2) Hidden Compartment Behind a Drawer. 3) Router Edge Guide.*

Slant Front Desk 16 *Solid cherry construction makes this Slant Front Desk an heirloom project. Inside is a handy pigeonhole unit with drawers, dividers, and a shelf.*

Ogee Bracket Feet 26 *You don't have to be a sculptor to make decorative feet. Step-by-step instructions reduce it to a series of cove, curve, and smoothing operations.*

Sharp Teeth 30 *A close-up look at the business end of a crosscut blade. Plus, how to recognize a well-sharpened carbide tooth.*

Sources 31 *Hardware and supplies needed for the projects in this issue.*

Coat Rack & Shelf *page 6*

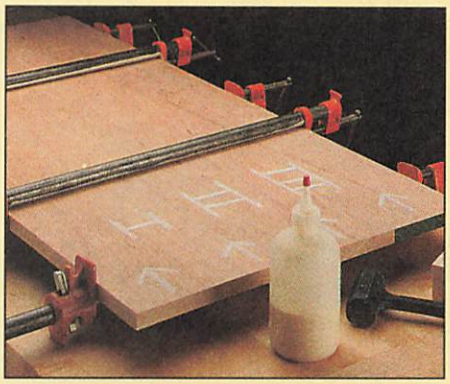

Gluing Up Panels *page 11*

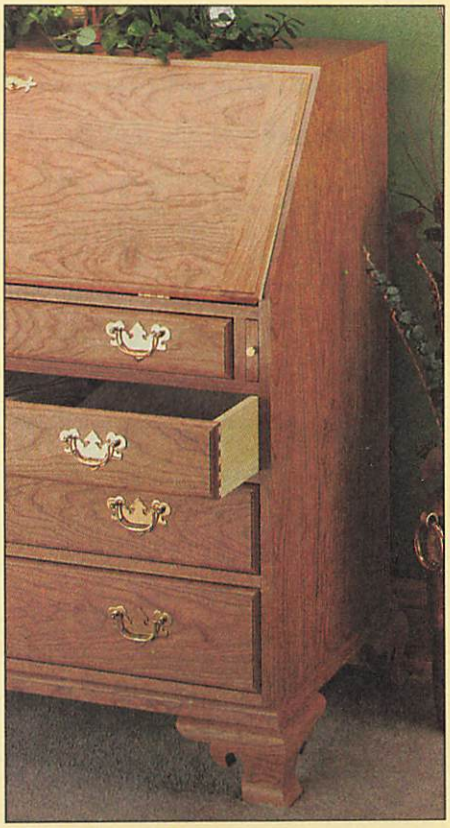

Slant Front Desk *page 16*

Tips & Techniques

PIPE CLAMP SPREADER

■ Recently I reglued a failed joint in an old dresser. I didn't want to take apart and reglue all the joints — just the failed one. But holding the joint open and squeezing the glue in at the same time was a problem. I didn't have enough hands.

To solve this, I came up with a way to apply an even, outward force on the failed joint. I used a pipe clamp — but not in the usual way.

First remove both the tail and the head of the clamp from the pipe. Then reinstall them *backwards*, on the pipe, see Fig. 1. When reinstalling the head, screw the pipe about halfway into the threads, see Fig. 1a.

Then, to provide a runner for the jaw on the head, you'll need an extra 8"-long threaded piece of pipe. Screw this piece into the remaining threads of the head.

To open the joint, position the clamp near the failed joint, see Fig. 2. As you turn the handle, you'll be able to precisely control the amount of distance between the head and tail to open the joint. (Note: You'll have to slide the handle back and forth during each turn to clear the pipe.)

Willard F. Leister
Wagener, South Carolina

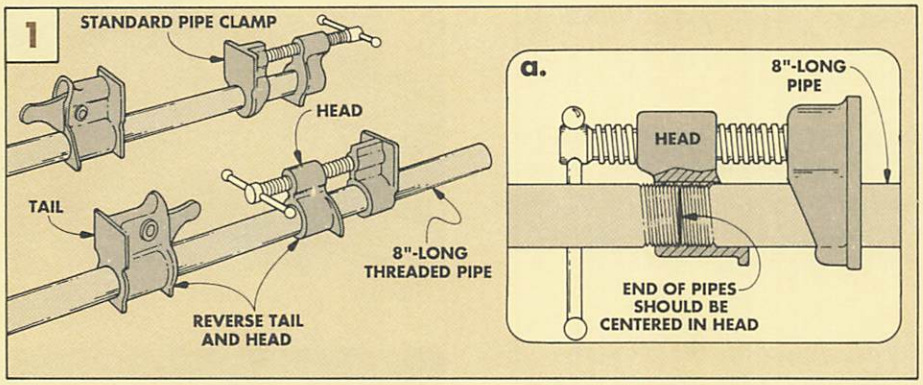

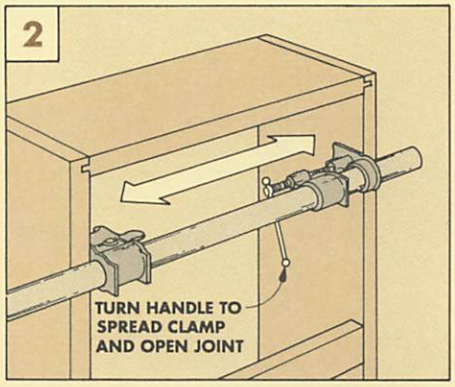

SQUARING A SAW BLADE

■ Most woodworkers know how to check if a table saw blade is 90° to the table, see Fig. 1. But the method I use is a little different, and a little more accurate.

First, adjust the saw blade to the height necessary to cut your workpiece. (I make this adjustment first because the angle of the blade may change slightly as it's raised and lowered.)

Then remove the insert plate to expose the saw blade, see Fig. 2. Using an *accurate* combination square, extend the blade of the square below the surface of the table saw, see Fig. 2.

Now when checking the saw blade, I'm able to use the entire surface of the saw blade. This produces a more accurate reading than the other method.

Adam Coutts
Santa Monica, California

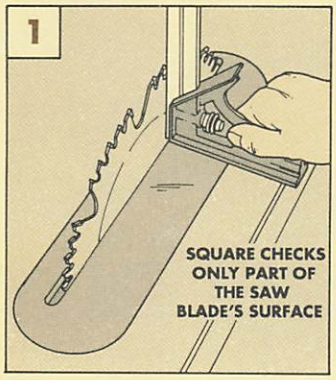

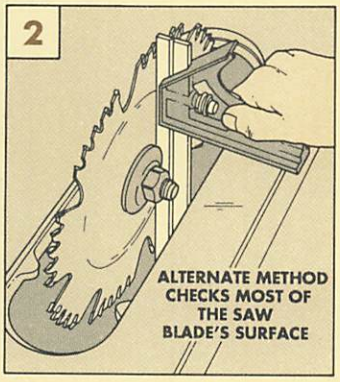

BREADBOARD ENDS & BISCUITS

■ Over time, end caps (sometimes called "breadboard ends") have a tendency to break free from glued-up blanks. This is due to the expansion and contraction of conflicting wood grains glued to each other. But a method I use with biscuits allows the wood to expand and contract, see Fig. 1.

Instead of gluing *all* the biscuits in, I only glue the innermost biscuits (usually one or two). Also, I only apply glue along the joint line near the glued-in biscuits.

The other biscuits are allowed to float. And, to keep these from shifting, I soak them in hot water for 15 minutes so they can swell. Then after they're dry (about an hour), push them into the slots.

Keith Lukaszek
Hamtramck, Michigan

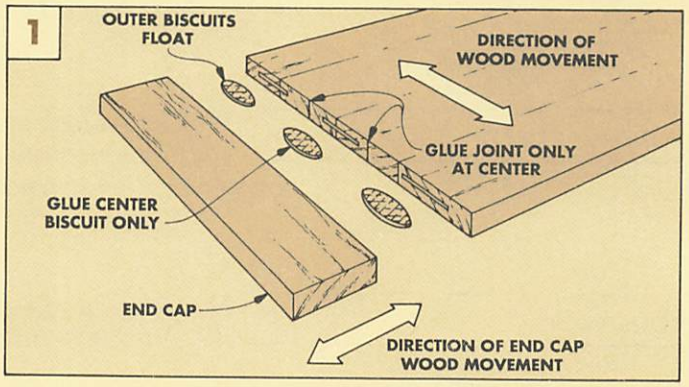

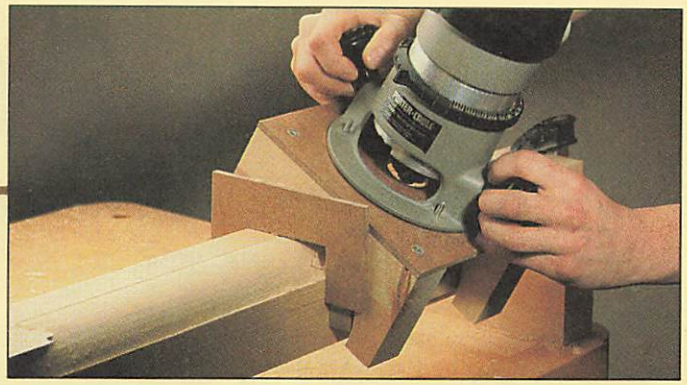

ROUTING LARGE HALF-ROUNDS

■ Recently I made a new banister and handrail for a set of stairs in my home. I wanted the top edge of both to have a matching rounded profile. But figuring out a way to shape a large half-round (in my case, a profile with a 1½" radius) without a shaper was quite a challenge.

To do it, I came up with a technique using a router, a straight bit, and a jig I built, see photo.

The jig has two main sections: a carriage and a platform. The carriage fits snugly over the workpiece. And the platform pivots on top of the carriage.

The carriage consists of two support blocks shaped like the front of a Marine Corps Quonset hut, see Fig. 1. These are connected by stabilizers that ride along the sides of the workpiece. A pair of end caps made of Masonite prevent the router from slipping off the support blocks.

When cutting the notches in the support blocks and end caps, cut them to fit over the workpiece you're going to rout. You want the carriage to fit over the workpiece snugly, see Fig. 2.

The platform consists of a base plate that's screwed to the router, see Fig. 1. And screwed to the base plate are two arched pivot blocks that ride on the carriage support blocks.

To use the jig, first set the depth of the bit so it rests on the workpiece, see Fig. 2. Then, starting at one end, rout along the length of the workpiece. (During each pass, hold the router at a consistent angle .)

Once you've reached the end, pivot the platform slightly and rout back towards the opposite end, see Fig. 2. Repeat this until all the waste has been removed.

After both corners have been rounded, clean up the profile with a cabinet scraper and sandpaper. (With the jig built, it took me about an hour to complete a six foot length of handrail.)

Dave Ender
Rochester, Minnesota

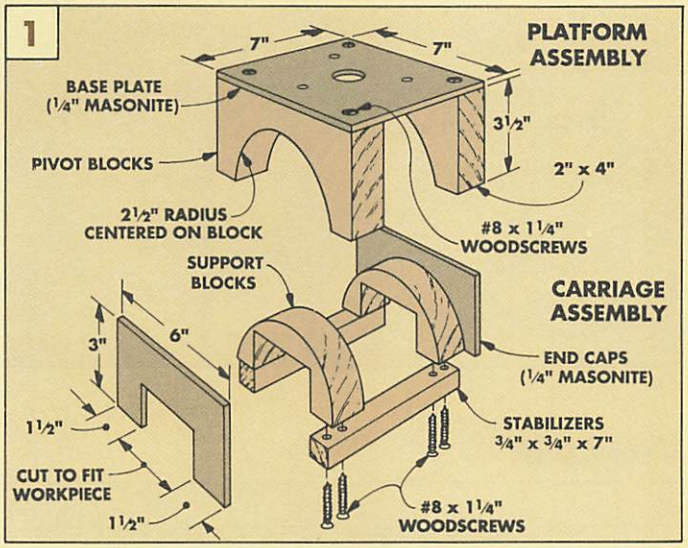

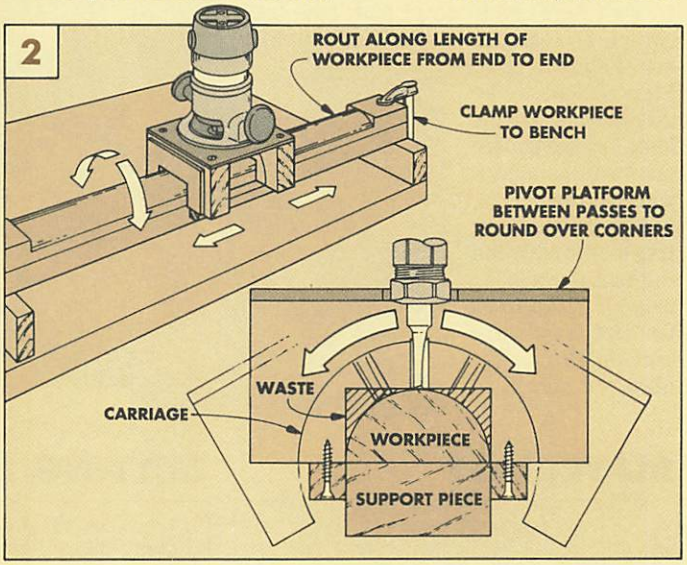

QUICK TIPS

MECHANICAL PENCILS

■ Next time you're laying out hand-cut dovetails (or any other type of layout work), try using a mechanical drafting pencil instead of a traditional No. 2 pencil or carpenter's pencil.

You'll find the thinner layout lines a mechanical pencil produces are easier to follow if you want to cut tight fitting joints.

The mechanical pencil I use takes lead that is only .5mm in diameter. And whenever it needs to be sharpened, all I have to do is press the push-button for a fresh tip.

You can purchase mechanical drafting pencils with lead refills for under $10 at most office supply stores.

William O. Barger
San Antonio, Texas

SECURING SETSCREWS

■ The setscrews in my table saw and router table inserts used to vibrate out of position. To keep them from moving, I removed and wrapped each one in plumber's tape. Since then, the setscrews have stayed put and the inserts have remained level.

Steven R. Hardy
Marysville, Washington

SEND IN YOUR TIPS

If you would like to share an original tip or idea, just send it to *Woodsmith*, Tips and Techniques, 2200 Grand Avenue, Des Moines, Iowa 50312.

We will pay (upon publication) $25 to $100, depending on the published length of the tip. Please include an explanation, a photo or sketch (we'll draw a new one), and a daytime telephone number, in case we have some questions.

Country Coat Rack

How do you fit a door in an opening?
With this coat rack, it's all in how you mount the hinges.

The only trick to this Country Coat Rack is fitting the door. How do you end up with a uniform gap around each side? I started with the gap at the bottom — it's determined by the depth of the hinge mortises. Then after the bottom gap is established, creating the other gaps is just a matter of cutting the door to size.

HANGING SYSTEM. Another interesting challenge is figuring out how to hang the coat rack. Instead of screwing it directly to the wall, the back is beveled and hangs on a mating cleat, see photo on page 9. It's easy to position but still strong.

FINISH. I built two coat racks, one of oak (shown here) and one of pine (see back cover). The oak one was finished with General Finishes' Two Step Sealacell. To give the pine a rustic look, I added square pegs and painted it with milk paint.

A full-sized pattern for the ends and the back is available, as well as sources for the hardware and finishing supplies, see page 31.

MATERIALS

WOOD PARTS

A	Ends (2)	¾ x 8¼ - 16
B	Top Shelf (1)	¾ x 7½ - 34½
C	Bottom Shelf (1)	¾ x 7½ - 33½
D	Molding Strips (1)	¾ x ¾ - 60 rgh.
E	Back (1)	¾ x 7¼ - 33½
F	Hanging Cleat (1)	¾ x 2 - 32
G	Peg Rail (1)	¾ x 6¼ - 33½
H	Door (1)	¾ x 4⅛ - 32⅞

SUPPLIES

- (2) 2" x 1⅜" Hinges
- (1) Magnetic Catch and Plate
- (6) 3½" Shaker Pegs
- (1) 1" Oak Door Knob
- (24) #8 x 1½" Flathead Woodscrews
- (10) ⅜" Oak Flat Top Plugs
- (14) 4d Finish Nails

CUTTING DIAGRAM

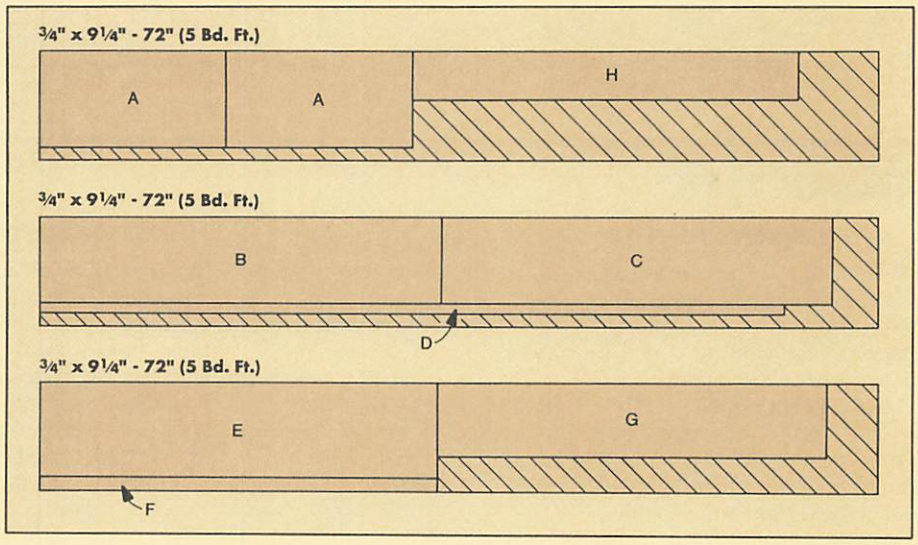

EXPLODED VIEW

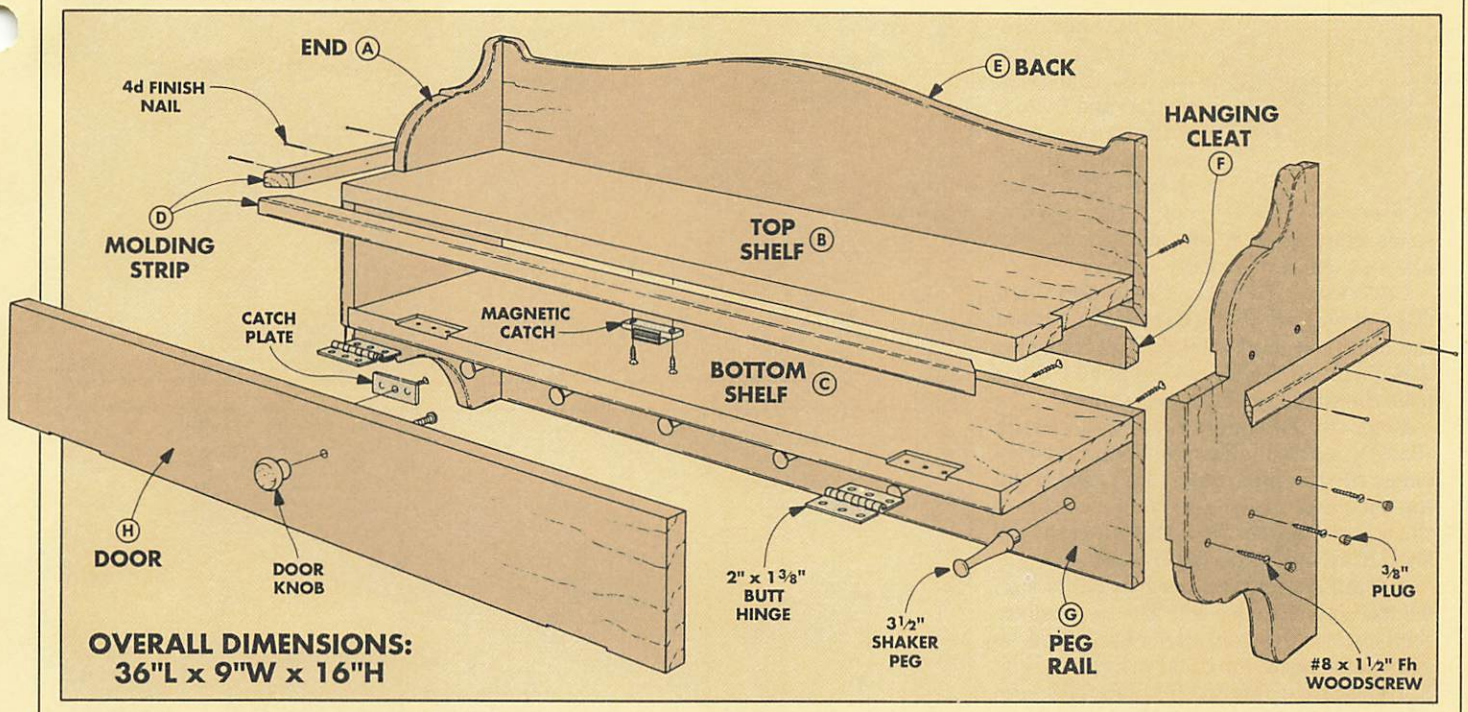

ENDS

The Country Coat Rack is held together by the **ends (A)**. Start by cutting two end blanks roughly 8½" wide. (Note: If you can't find flat stock this wide, edge-glue a couple of boards together.) Then cut them to a finished length of 16", see Fig. 1.

CUT DADOES. The shelves fit into ¼"-deep dadoes cut in the blanks, see Fig. 1b. The width of the dadoes should match the thickness of the stock. Position the first dado 5½" from the *bottom* edge, the second 10½".

CUT RABBETS. After cutting the dadoes, cut the rabbets for the back pieces. Like the dadoes, the rabbets should match the thickness of the the stock. They're cut along the inside back edge of each blank, see Fig. 1a.

The next step is to cut the end blanks to finished width (8¼"), see Fig. 1. Doing this after cutting the dadoes cleans up any chipout. Just be sure that you trim off the front — not the rabbeted edges.

SCREW HOLES. To screw the shelves to the ends, you'll need to drill counterbores. They're centered on the width of each dado, see Fig. 1 and 1b. Then, drill shank holes through each counterbore.

CUT OUT SHAPE. The coat rack gets much of its country appeal from its curved edges. To cut an identical shape on both ends, carpet tape them together (dadoes facing *in*).

Now lay out the curved pattern on one face of the end pieces and cut just outside the lines, see Fig. 2. Then, to smooth up to the line, I used a drum sander.

ROUND OVER EDGES. To complete the ends, I routed a ¼" round-over on all the edges *except* the back. Note: To prevent any gaps where the shelves meet the ends, don't round over the edges where noted in Fig. 2a.

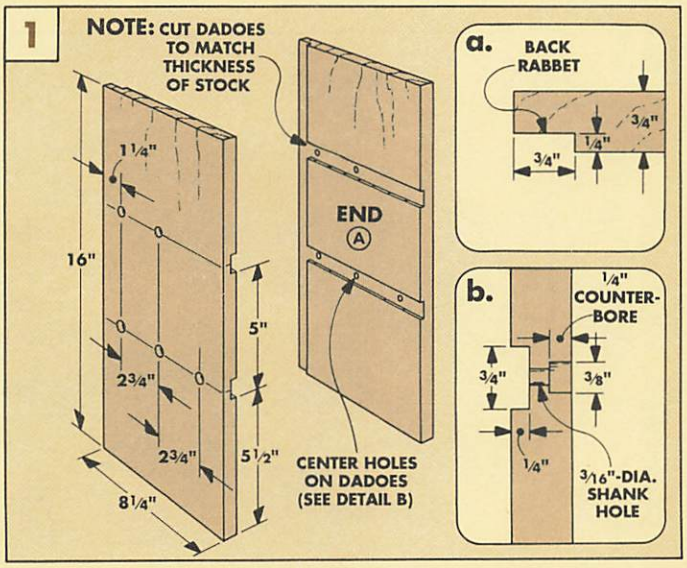

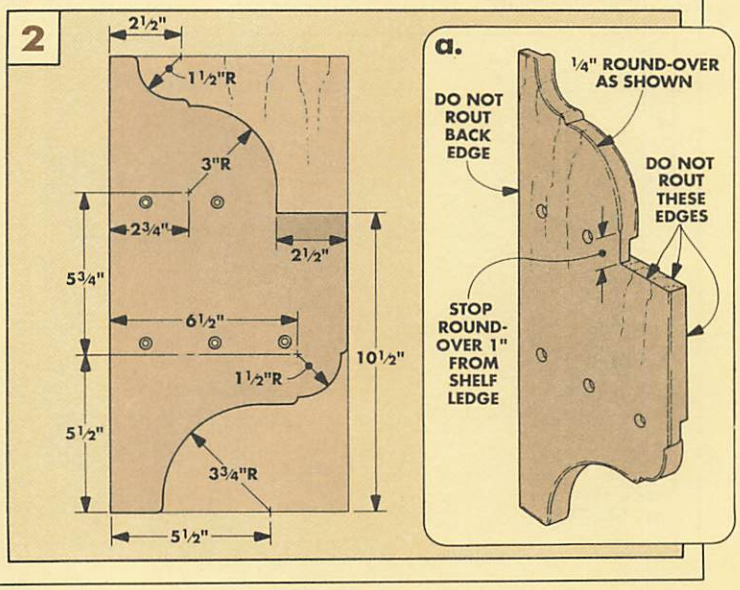

SHELVES

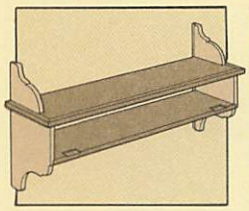

With the ends complete, I began on the shelves that form the top and bottom of the storage compartment. The top shelf is a little different. It has molding strips along the front and sides, so it looks like it extends *through* the ends.

CUT TO SIZE. To begin, rip the **top shelf (B)** and **bottom shelf (C)** to width. To find the width, measure the length of the lower dado on the ends (A), see Figs. 3 and 4. (Start from the shoulder of the back rabbet.)

Next, cut the bottom shelf (C) to length (33½"), see Fig. 4. Then clamp the shelf between the two ends (A) and measure from the outside face of one end to the outside of the other. This will be the length of the top shelf (C) (34½" in my case), see Fig. 3.

TOP SHELF. With the shelves cut to size, set the bottom shelf aside. The top shelf extends across the front edge of each end, so cut a notch out of the back corners, see Fig. 3. The length of this notch equals the length of the top dado in the ends (A). (Again, measure from the shoulder of the back rabbet.)

At this point, I drilled the pilot holes for the door catch, see Fig. 3. Inset the door catch a distance equal to the thickness of the stock *plus* the catch plate. I attached the plate to the door catch and positioned them ¾" in from the front edge.

BOTTOM SHELF. Next, I went back to the bottom shelf. First, lay out the locations of the mortises for the hinges, see Fig. 4.

I wanted a uniform 1/16" gap around the door. If the hinges were mounted flush with the surface, the gap between the shelf and the door would be about ⅛". So I cut the mortise on the shelf a little deeper — to half the thickness of the hinge barrel, see Fig. 4a.

After the mortises are cut, drill pilot holes for the screws. Then, rout a ¼" round-over on the front bottom edge, see Fig. 4a.

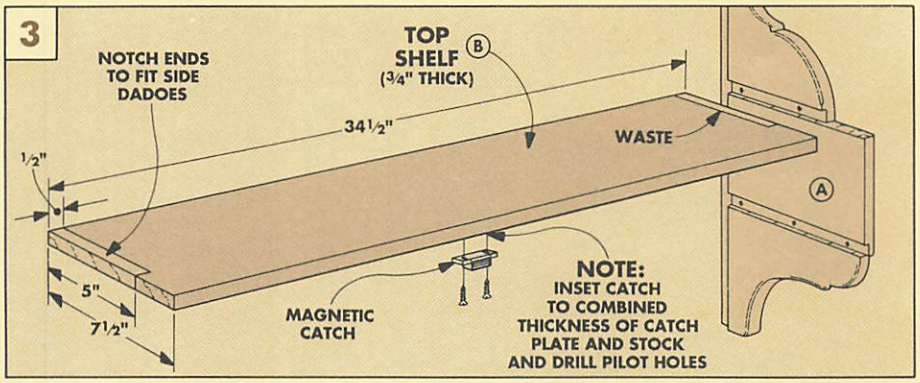

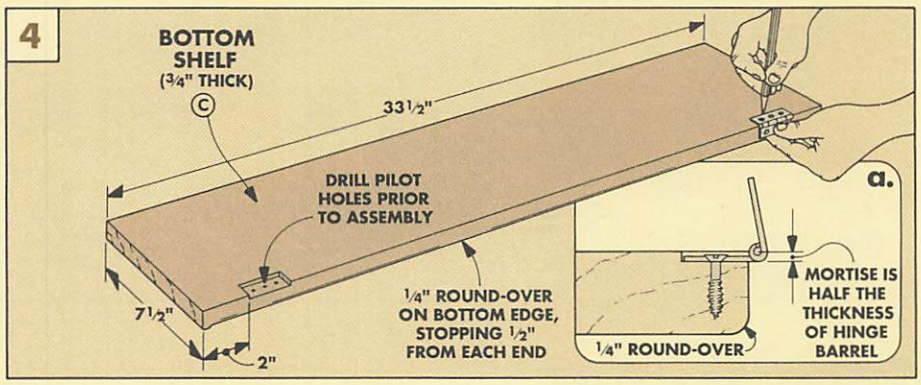

ASSEMBLY. At this point, dry assemble the shelves (B and C) and ends (A), and mark the position of the pilot holes on the shelves, see Fig. 5. After drilling the holes, glue and screw the shelves between the ends.

To prevent the top shelf from cupping at the front, I also drilled and screwed the shelf to the ends from the top, see Fig. 5 and 5a. Then I plugged all the screw holes except those covered by the molding strips.

MOLDING. The molding strips cover the edges of the top shelf. (The thicknesses of each should match.) I started by rounding over the front edges of the ¾"-wide molding strips (D), see Fig. 6a. Then I cut one 40"-long strip, plus two 10"-long strips.

For the molding to fit best at the mitered corners, I cut the front piece first so the distance between the short points equals the length of the top shelf, see Fig. 6.

After the front strip is glued on, miter the other strips to fit on the sides. But only apply glue to the *front* ends of these strips. This allows for expansion and contraction with changes in humidity. Then nail the strips on and set the nails, see Fig. 6.

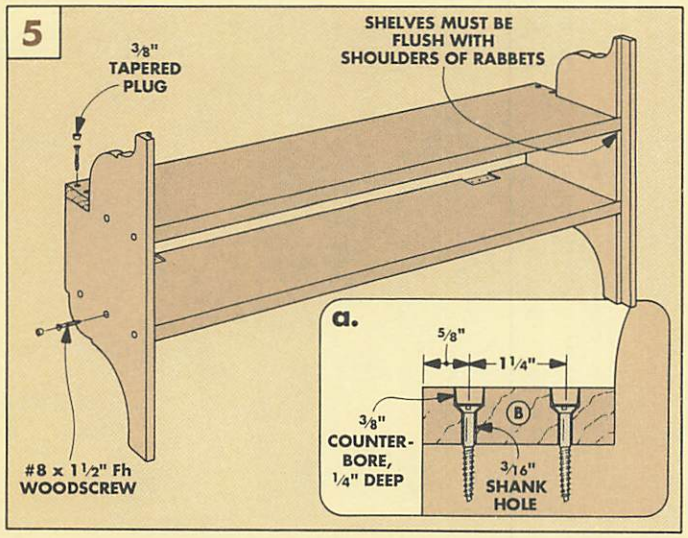

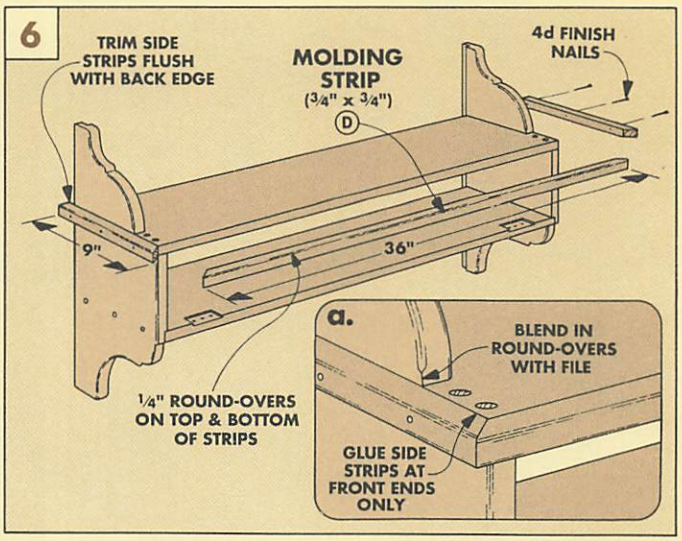

BACKS

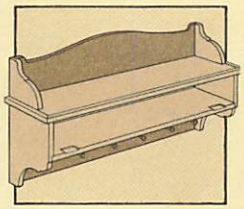

The back of the coat rack is different than you might expect. Instead of one wide piece, it has two — a back (E) for the top and a peg rail (G) for the bottom. The gap between the pieces allows the coat rack to hang on a beveled cleat that's secured to the wall, see the box at right.

CUT BACK. The cleat is originally part of the back (E). Start by ripping the piece to a rough width of 9¼". Then cut the back piece to length so it will fit between the rabbets in the ends (A), see Fig. 8. (In my case, 33½" long.) Then, I tilted the table saw blade to 45° and ripped the back to a width of 7¼". Keep the waste piece. It will be used later as the hanging cleat (F).

CUT CURVE. The next step is to lay out the curve on the *back* side of the back (E), see Figs. 7 and 8. Mark the centerline on the workpiece and transfer the half-pattern to it. Then flip the pattern over and transfer it to the other half of the workpiece. Now, with a band saw or sabre saw, cut out the curve, staying 1/16" from the line. Finally, I used a drum sander to smooth up to the line.

CUT PEG RAIL. Now the peg rail (G) is cut to size. To determine the width of this piece, measure from the top edge of the bottom shelf to the bottom of the end pieces (6¼"), see Fig. 11. Like the back (E), it fits between the rabbets (33½" long).

DRILL PEG HOLES. After the peg rail is cut to size, drill holes for the Shaker pegs, see Fig. 9. These holes are centered on a line drawn 2¾" from the bottom edge. Begin the series of holes with a hole centered 3" from the end. Then drill the remaining five holes at 5½" intervals (center to center).

ROUT ROUND-OVERS. Before attaching both the back and the peg rail, I routed a ¼" round-over along the upper front edge of the back (E), see Fig. 8a. I also routed the lower front edge of the peg rail (G), see Fig. 9. (Note: To prevent any gaps where these pieces fit into the rabbets, stop the round-overs ½" from the end of each piece.)

ATTACH BACKS. Now, drill countersunk screw holes through the back and the peg rail and into the shelves, see Fig. 10. Then screw these pieces to the shelves. To hold the back and peg rail in tight, I also nailed them into the rabbets. (Shop Note: To avoid splitting the wood, I drilled pilot holes and used 4d finish nails, angling them slightly.)

BLEND ROUND-OVERS. Some of the round-overs on the ends (A) and the back pieces (E and G) were stopped short so there wouldn't be gaps at the joints. But now that these pieces are assembled, you can finish rounding them over. Unfortunately, your router won't work in some places, so use a file to blend the round-overs, see Figs. 6a and 10.

HANGING SYSTEM

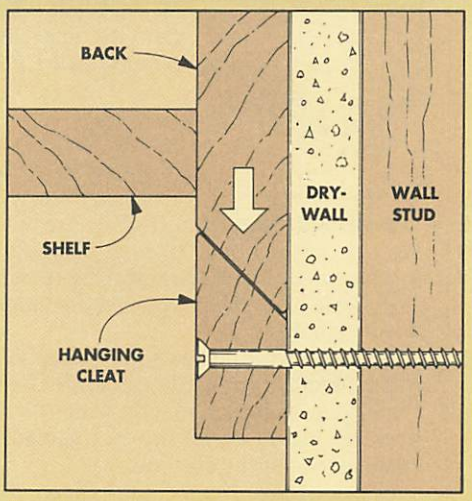

Here's how the hanging system works. A beveled cleat is cut to length so it fits easily into the opening in the back of the coat rack. Then the cleat is screwed to a pair of studs in the wall. After it's finished, the coat rack is hung on the cleat so the mating bevels interlock.

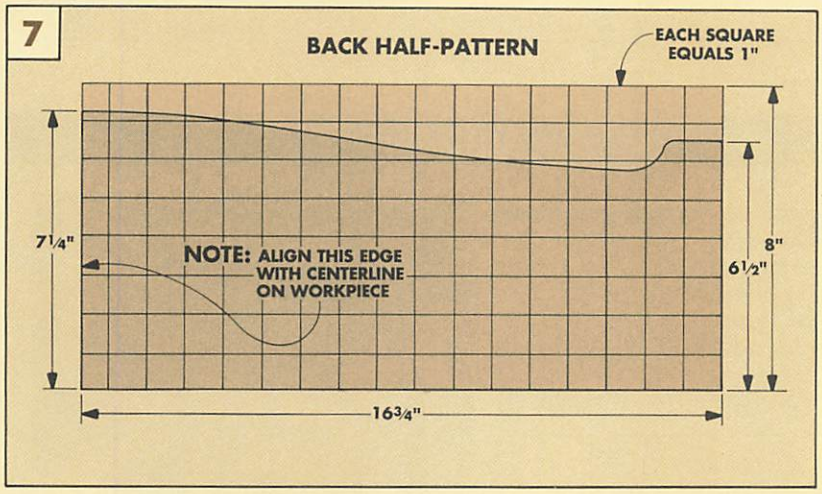

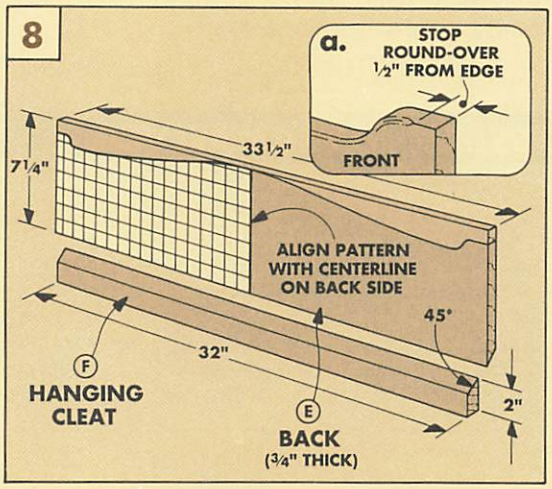

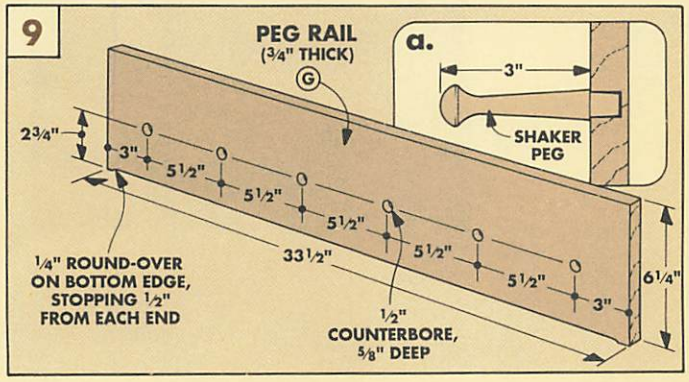

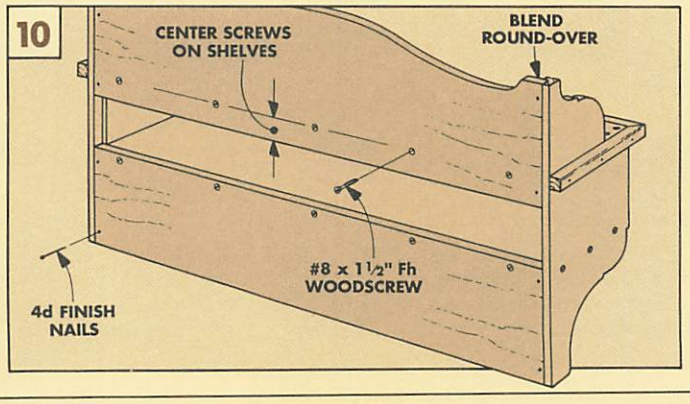

DOOR

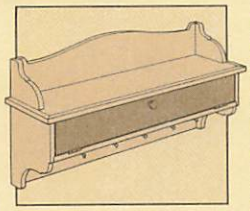

All that's left is the door. It should have a consistent gap around each side. To get this, I cut the door to fit tight and trimmed it for an even gap later.

CUT DOOR. Start by measuring the opening and cut the **door (H)** to fit. Then rip it 1/16" narrower than the height of the opening so you can close the door when the hinges are mounted.

Now, attach the hinges to the bottom shelf with a "stubby" screwdriver. Then, to mark the position of the hinges, clamp them to the door, see Fig. 11. Note: The door should be centered across the opening.

CUT MORTISES. Next, cut the hinge mortises on the edge of the door, see Fig. 11a. Since the mortises in the shelf determined the gap along the bottom, these mortises can be cut to the thickness of the hinge leaf.

TRIM DOOR. After screwing the hinges to the door, measure the gap along the bottom and mark the top and sides so they'll have uniform gaps. Then remove the door and trim the top and sides. I also softened the front edges with sandpaper.

DOOR KNOB AND CATCH. Finally, drill pilot holes for the catch plate and door knob, see Figs. 11 and 12. Then apply finish to the coat rack and mount the hardware.

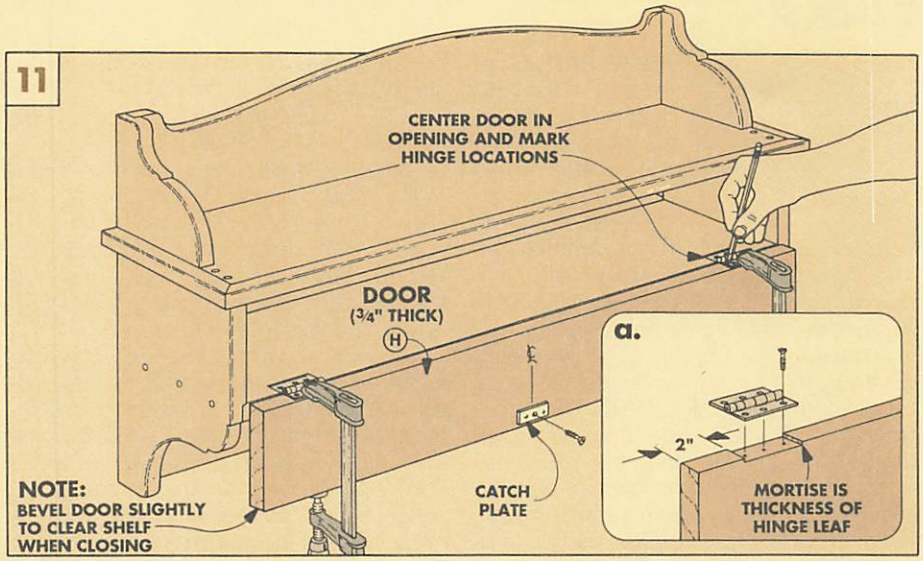

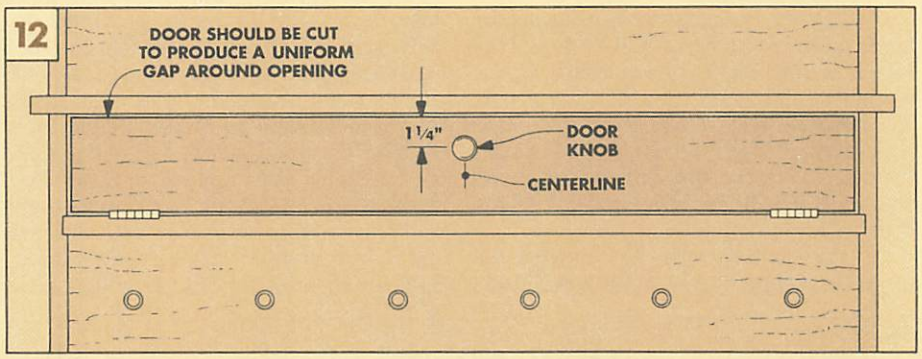

DESIGN ALTERNATIVES

I wanted to add a hundred years or more to the appearance of the Country Coat Rack that I made out of pine. To do this, I finished it a little differently than the oak one.

SQUARE PEGS. Instead of round plugs, I covered the screws in the ends and the top with traditional square pegs, see below.

MILK PAINT. Then, to finish the pine, I used what a country craftsman may have used — milk paint. (Note: For information on techniques for applying milk paint, refer to the article in *Woodsmith* No. 80.)

DISTRESSING. Finally, I distressed the wood, see photo at right. Adding dings and scratches can make a project look aged, but do it a little bit at a time — it can be overdone.

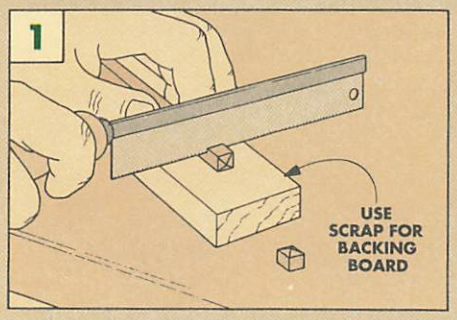

To make square pegs, first cut a 3/8"-square piece to a rough length of 18". Then, using a disc sander, shape the end to a slight pyramid and cut the peg about 3/8" long.

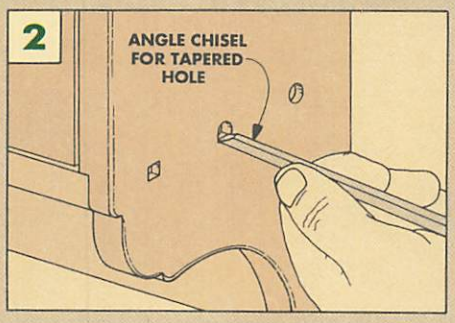

Next, square the screw holes with a chisel. The pegs will fit easier if you round their bottom edges with sandpaper. Finally, add glue and tap the pegs in place.

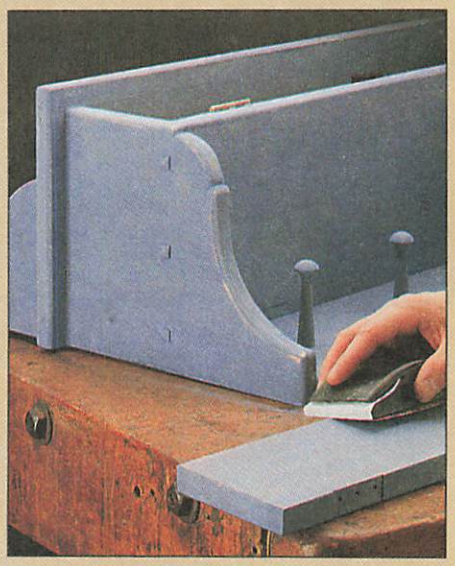

To give the Coat Rack a worn appearance, sand some of the edges after painting, and round the corners that would get the most wear. Then add a few dents and scratches.

Gluing Up Panels

It's not easy to make a bunch of boards look like a single, flat piece of wood. But when making a solid, edge-glued panel, that's exactly the goal.

The colors should match. The grain of one piece should merge into the grain of the next. The joint lines should be practically invisible. If the panel looks like a bunch of boards slapped together, it will draw attention to itself — detracting from the appearance of the entire project.

And that's only half the battle. While an edge-glued panel should look like one, wide piece of wood, it better not act like it. A wide piece of wood can cup or bow with changes in humidity. An edge-glued panel can warp too, but if the pieces are arranged and prepared properly, this can usually be avoided.

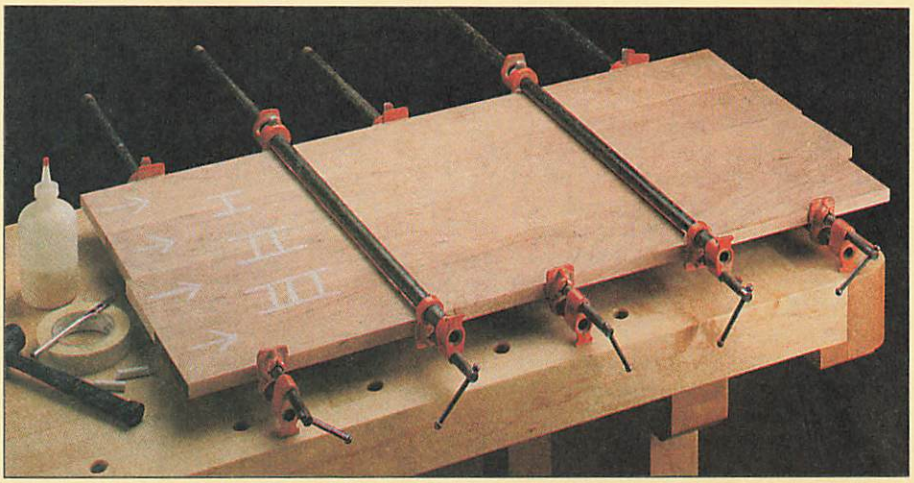

SELECTING & ARRANGING BOARDS

When edge-gluing, the easiest step to rush through is selecting the wood. But carefully choosing and arranging the boards into the panel are essential for good results.

CHOOSING LUMBER. Selecting straight boards makes clamping much easier. Some *slight* warp is unavoidable and can be corrected. A cupped board can be ripped in two, and a slightly bowed piece can be forced flat while clamping. But don't use a twisted board, it's very difficult to twist it straight.

After selecting the lumber, I arrange the boards as they will appear in the panel — it's like putting together a puzzle.

APPEARANCE. First, I match the color. Then I try to fit the pieces together, turning and flipping them until the grain patterns seem to match, see photo. Straight grain should run next to straight grain. Curved grain should merge into curved grain.

But while the appearance is the most important consideration, it isn't the only one.

GRAIN DIRECTION. After the panel is glued up, you'll need to smooth it . Unless you use a sander, you'll probably plane it by hand or with a planer. If the grain on various boards runs in opposite directions, some pieces will probably chip out while planing.

I determine the direction of the grain by looking at the *edge* of the board, see Fig. 1. Grain that's consistently curving the same way makes the job easy. But frequently, you have to pick the direction it curves the most.

Shop Tip: Draw an arrow on each face to note the direction of the grain, see Fig. 1. It will be easier to arrange the boards later.

END GRAIN. There's one more thing to consider in solving the puzzle — how will the panel cup with changes in humidity?

For a panel that's anchored (such as a table top screwed to aprons), cupping is rarely a problem. But a panel that's not secured (a chest lid, for example) can cup pretty badly.

For those panels that won't be anchored, alternate the end grain from board to board, see Fig. 2. By varying the growth rings, the whole panel won't cup in one direction. This is because each board cups in the opposite direction of the boards on either side of it.

MARK ORDER. Once the boards are arranged into a panel, I chalk Roman numerals across the joints, see Fig. 3. The Roman numerals prevent the boards from getting mixed up, especially if you're gluing up a number of panels.

Okay, so which criteria is most important: appearance, grain direction, or end grain? For me, it's appearance. I try to get the grain direction and end grain arranged correctly as well, but often, it's a compromise.

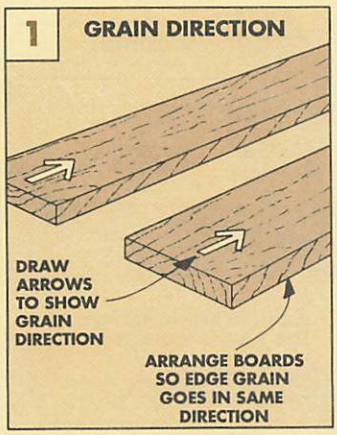

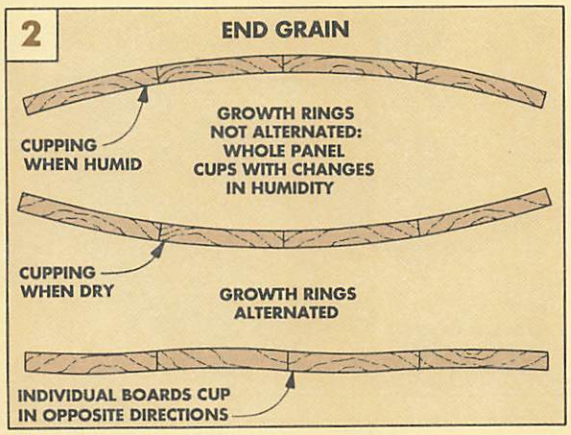

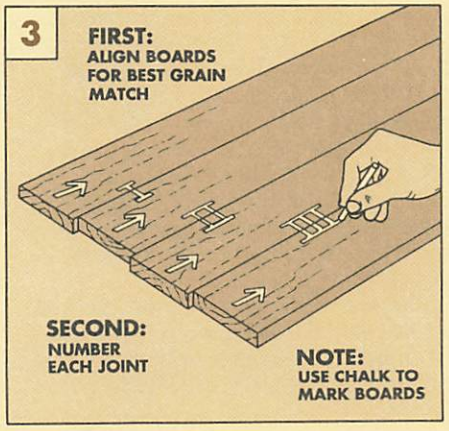

JOINTING EDGES

When you're arranging boards into a panel, you may have to compromise a bit. But jointing the edges of the workpieces requires precision. If the edges aren't smooth, straight, and square to the faces, you will have problems when gluing or clamping. Either the glue won't bond properly, or the whole panel can cup across its width.

CUPPED PANELS. A strong joint is as easy as cutting smooth, straight edges. Unfortunately, strong joints don't always mean a flat panel. If the edges aren't square to the face of the board, the panel will cup as it's clamped together, see Figs. 4 and 4a. To prevent this, make sure your machine is set up correctly. When using a jointer, set the *fence* exactly 90° to the table. And when using a table saw, set the *blade* 90° to the table.

JOINTER. My first choice for cutting a smooth, straight edge is to use a jointer, see Fig. 5. A jointer takes a uniform amount off each board, and you don't have to adjust the fence with every pass. I slowly feed the workpiece *with the grain*, see Fig. 5a. After a few light passes, the board has a smooth edge that's ready to be glued.

TABLE SAW. If you don't have a jointer, you can joint edges with a table saw and a good combination blade, see Fig. 6.

For the smoothest edge, I use a double-cut method. To do this, begin by ripping the boards straight. Then repeat the cut, this time only removing about half the thickness of the saw blade, see Fig. 6a. This second, lighter cut results in a very smooth surface with virtually no saw marks or burning.

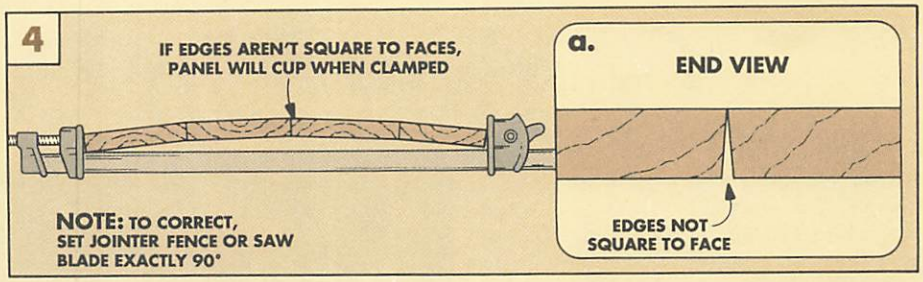

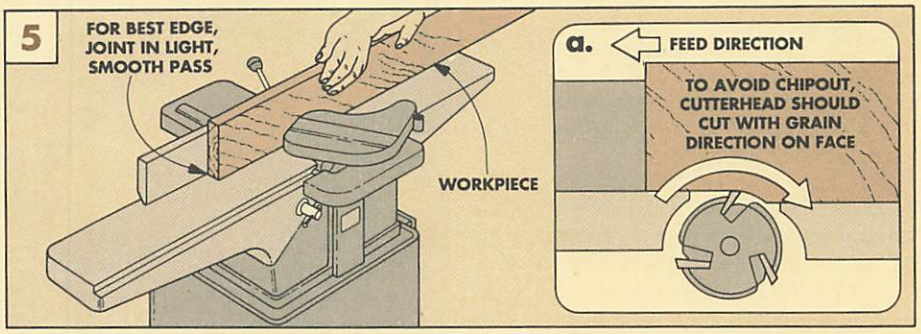

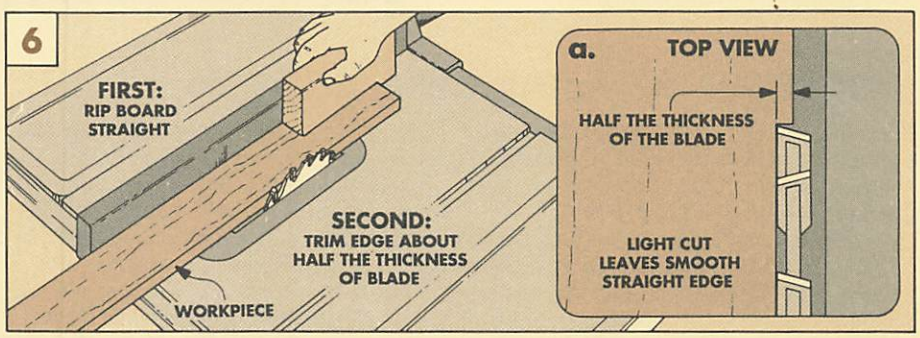

SPLINES

I only use splines when I need help with alignment–they don't add much strength to a joint. If I'm clamping slightly bowed stock or gluing a panel too thin to sand much off, I use splines to keep the panel as flush across the surface as possible.

Shop Note: I smooth completed panels with a thickness planer. If a panel will be too wide to do this, I'll glue it into narrow sections first, see Fig. 2. Then, after planing, I use a spline to glue the sections together.

SLOTS. I rout the slots for the splines with a router and a slot cutter, see Figs. 1 and 1a. (I cut the splines after the slots are routed. They should fit into the slots easily, see Fig. 2a.) To keep the slot a uniform distance from the face, rout them by hand, not on a router table. A hand-held router closely follows the shape of a bowed board.

If the end of the panel will be exposed, start and stop the slot short. (Shop Note: I rout until the *outside* edge of the router base is at the end of the piece, see Fig. 1.)

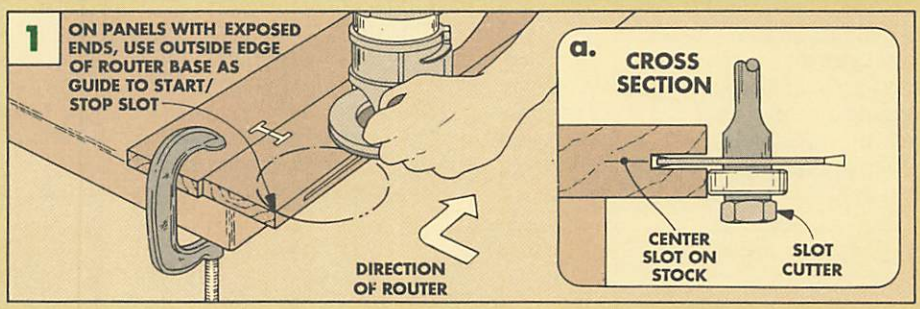

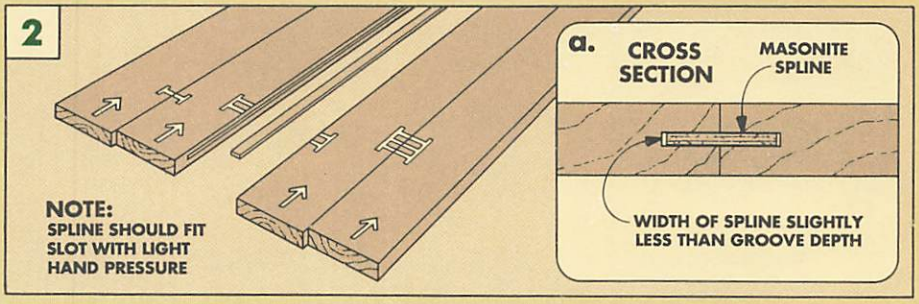

GLUING

I don't like to take chances when gluing — by this point a lot of time and energy has been invested into selecting and preparing the boards. So to make sure there aren't any surprises, I always *dry* assemble the panel before gluing. And then when adding glue, I make sure there's enough for a good bond.

APPLYING GLUE. Some woodworkers put glue on only one edge of each board and don't bother to spread it out. This does have some advantages. It's quick, and the glue doesn't set up quite so fast. But I want to know that there's a thin, even film on *both* edges, so I spread the glue on with a brush.

Shop Note: If a glued surface appears dull rather than glossy, the glue has penetrated into the wood and more should be added.

REMOVING GLUE. Another thing I'm cautious about is removing the excess glue. Many suggest wiping it off with a damp rag as soon as you can. I've never been comfortable with that approach.

Removing glue this way can dilute it and force it into the pores of the wood, sealing out the finish. Dried glue is hard to see — until a finish is applied. Then it's quite obvious. But it's too late to do anything about it.

Instead, I let the panel set a few hours or even overnight. By then, the glue has had a chance to set, and I can scrape it off.

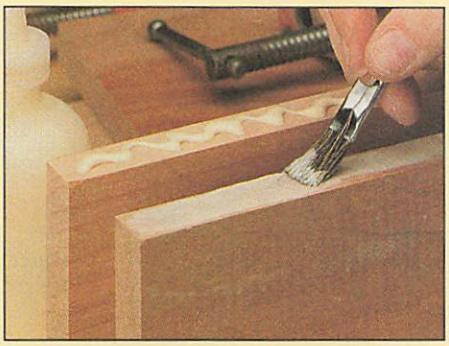

▲ *A strong joint requires a thin, consistent layer of glue. For a good bond, apply it to both edges and spread it out with a brush.*

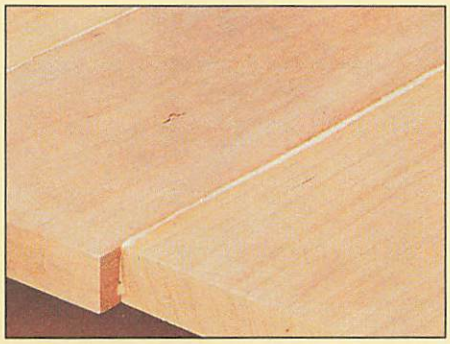

▲ *If the right amount of glue and equal clamping pressure are applied, an even bead of glue should form along the joint.*

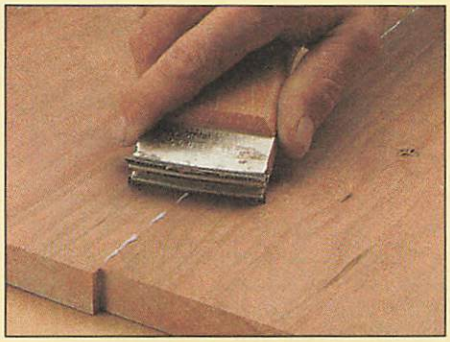

▲ *A common paint scraper will remove glue that's set overnight. A light scraping usually causes the beads of glue to "pop off."*

CLAMPING

When I'm ready to assemble the panel, I typically use ¾" pipe clamps. I space them 6" to 8" apart and alternate them above and below the panel to equalize the pressure and prevent cupping, see Fig. 7.

Shop Note: The iron in the pipes will react to the glue's moisture and the wood, leaving a black stain on the wood. Adding a strip of masking tape to each clamp prevents this.

FLATTEN THE BOARDS. I begin by lightly clamping the boards in place. Then I make sure the boards are flush across the top.

There are two ways to flatten a panel. If the boards aren't flush across the middle of the panel, you can pound it flat with a mallet and a block of wood, see Fig. 8.

If the boards aren't flat near the ends of the panel, sandwich the ends with scrap pieces and clamp them together, see Fig. 9. (Note: Be sure to use waxed paper under the scrap pieces so they can be removed later.)

CLAMPING PRESSURE. After the boards are flush, tighten the clamps until tiny beads of glue appear along each joint line. The clamps should be tight, but the important thing is equalizing the pressure along the joint line — not "cranking down" on the clamps as tight as you can.

To make sure there's equal pressure, watch the glue beads carefully. If they aren't consistent along the panel, the clamps are not distributing the pressure evenly. Tighten or add more clamps to the sections where there isn't any glue oozing out.

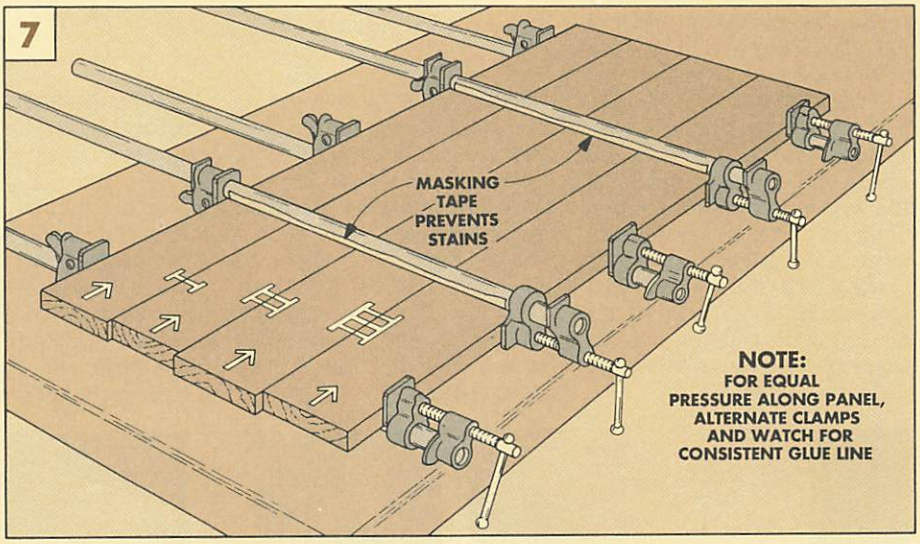

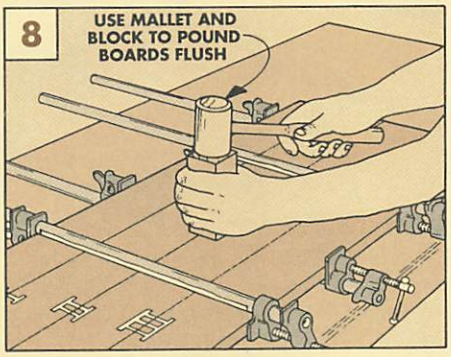

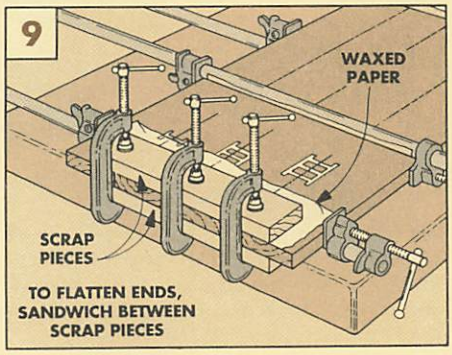

Shop Notes

TALL ROUTER TABLE FENCE

■ When I was building the Slant Front Desk on page 16, I wanted to use sliding dovetails for joining some parts of the desk. But there was a problem.

To rout a dovetailed tongue on the router table, the workpieces must stand on edge, see photos below. But my router table fence was too short to easily support a large panel while routing. And I ran into the same problem when I tried to rout the ends of the tall, narrow rails.

So to solve this, I built a tall fence that clamps to the top of my router table, see photos below. The fence offers a lot of support when routing the edges of large panels. And when used with a miter gauge, it's great for routing the ends of long pieces like the drawer rails or even holding pieces at an angle.

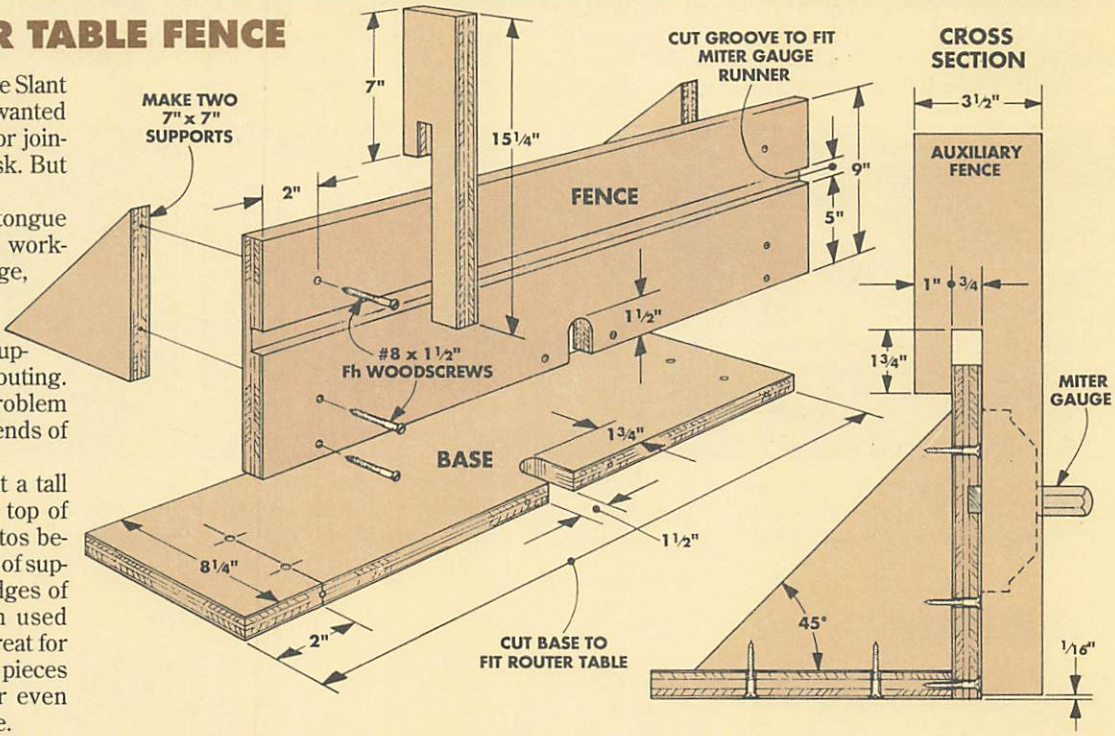

BASE & FENCE. To build the fence, begin by cutting a base from ¾"-thick plywood. The length of the base should equal the top of your router table. Then cut a 9"-high fence to this same length, see exploded view.

BIT NOTCH. Both the base and fence need a notch for the router bit. To cut the notches, I used a sabre saw and cleaned them up with a drum sander.

MITER GAUGE GROOVE. Next, cut a groove along the fence to guide your miter gauge. (The width of this groove should match the width of the runner on your miter gauge.)

Safety Note: The position of this groove is critical — don't cut it too low. The miter gauge should easily clear any router bit you use when the bit is set at its highest point.

AUXILIARY FENCE. I added an auxiliary fence to hold the miter gauge in a vertical position. This fence is screwed to the miter gauge and hooks behind the router table fence so the miter gauge can't fall out of the groove.

Note: When screwing the auxiliary fence to the miter gauge, position it 1/16" above the surface of the table. This allows the miter gauge to be tilted in either direction to support angled pieces, see photo below at right.

BRACES. Now, cut two 7" x 7" triangular braces to support the fence. (Note: One corner of the triangle must be exactly 90°.)

Finally, glue and screw all the pieces together. Then, after the glue dries, wipe a coat of wax on the face of the fence as well as the miter gauge groove to get a nice slick surface.

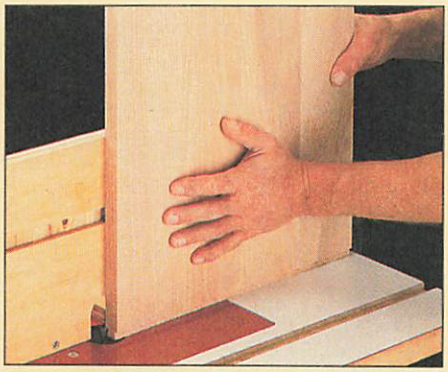

LARGE PANELS. Routing a dovetail tongue on the ends of a panel can be difficult with a short fence. This tall fence keeps the panel exactly 90° to the router bit.

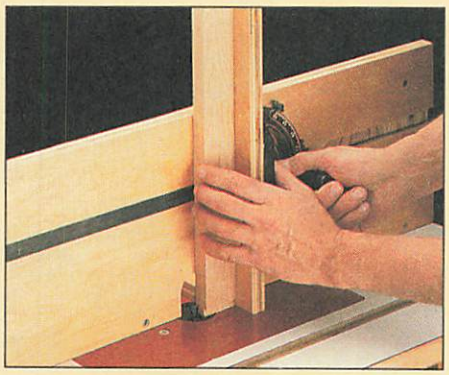

LONG PIECES. Long narrow pieces need even more support than panels. Adding a miter gauge with an auxiliary fence keeps the piece from tipping forward or back.

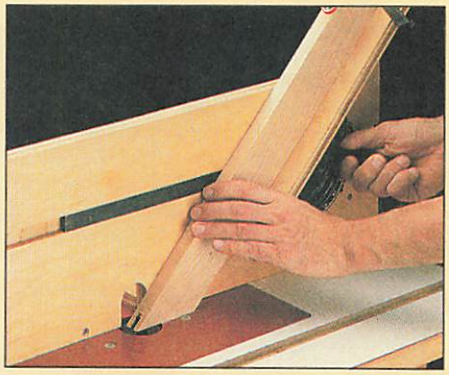

ANGLED PIECES. The miter gauge and auxiliary fence are able to tilt forward or backward, which really helps when you're routing grooves for splined miters.

HIDDEN COMPARTMENT

■ After building the pigeonhole insert for the Slant Front Desk, I decided to add a hidden compartment behind one drawer.

The compartment fits the drawer opening exactly, so you can't see any gaps around the edges. This way, when the compartment is in place, it looks like the back panel of the desk.

To open the compartment, you have to know exactly where to push. The "sweet spots" are at the sides — push either one and the opposite side pivots forward so you can pull it out, see Fig. 2.

There's really nothing difficult about building the compartment, but there are a couple of things you need to keep in mind.

Start with the front piece. When it fits perfectly, build the sides and back. Also, the compartment pivots open easiest when the back corners are slightly rounded, see Fig. 1.

The back of any drawer opening can conceal a hidden compartment — all you have to do is build the drawer shorter to create a little pocket behind it. To get at this compartment, you have to reach inside and push at just the right spot, see Fig. 2 below.

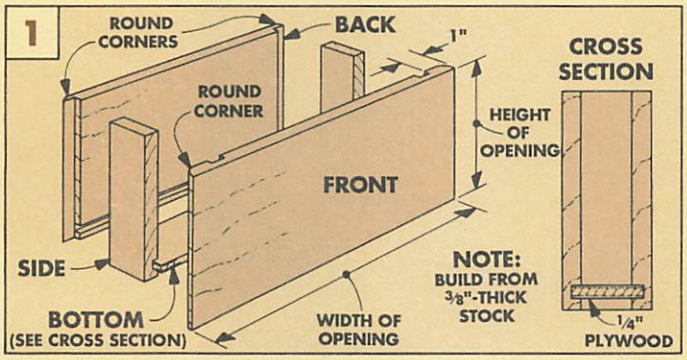

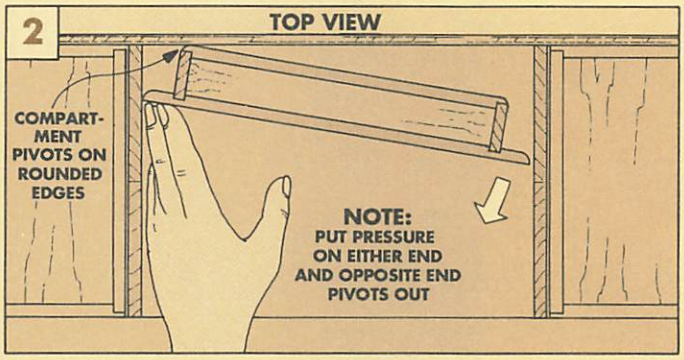

ROUTER EDGE GUIDE

■ A typical edge guide for routing grooves or dadoes across a panel works great — except that it only works with one size bit. But I use an edge guide that aligns the bit to the *center* of the groove, not the *edge*. So router bits of various sizes can be used.

This edge guide uses a hinged spacer. The width of the spacer equals the distance from the edge of the router base to the center of the bit, see Fig. 1.

Note: With some routers, the centerpoint of the bit isn't exactly centered in the base. When building and using this guide, always keep the same point of the base against the jig. I marked mine with tape, see Fig. 3.

The spacer aligns with a layout line that marks the center of the groove, see Fig. 2. When the spacer is aligned, the other half of the jig is clamped to the workpiece, and the spacer folds back like a window shutter, see Fig. 3.

Shop Note: I found a piano hinge works best — there's less slop than with other hinges. When installing the hinge, clamp the halves together tightly.

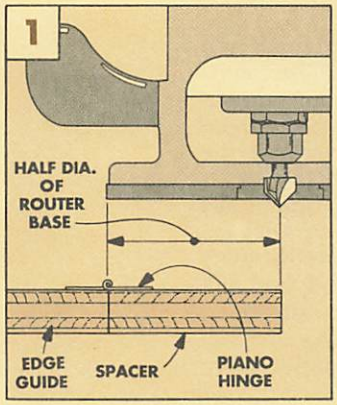

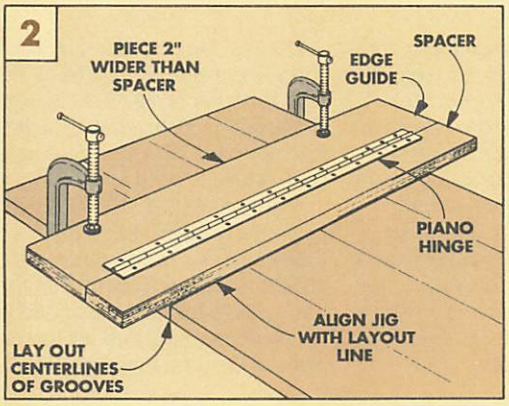

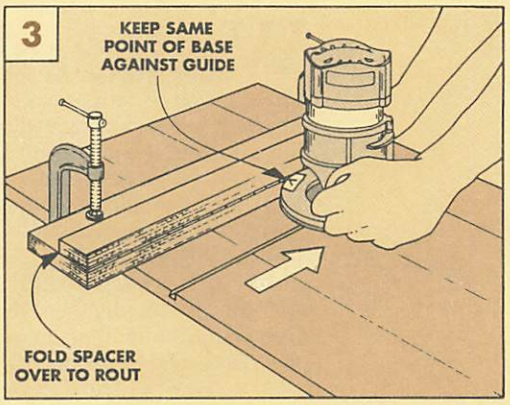

Slant Front Desk

Joining solid wood to solid wood can be a problem. Sliding dovetails are one answer. A dovetail tongue fits in a dovetail groove so the pieces of wood can move. It's a strong joint that doesn't need any glue.

Wood movement. It's a big concern with many projects. As solid wood expands and contracts with seasonal changes in humidity, joints can pop and boards may warp. Since this Desk is built with a number of wide solid cherry panels, it required special joinery to deal with the problems of wood movement.

JOINERY. Sliding dovetails are one answer. With this joinery technique, the wide side panels are free to float independently of the frames that hold the panels together. But the drop-down door required another answer. To keep this panel flat I used "breadboard" ends.

EXTRAS. Ogee bracket feet complete the case and raise it off the ground. Since these can be built for other projects, we're featuring separate step-by-step instructions on how to make the feet, see page 26. The pigeonhole unit inside the desk is also treated separately, see page 24.

WOOD & FINISH. All the visible parts of this desk are solid ¾"-thick black cherry. Only the drawer sides — and some other parts that aren't visible — are different. For these I used ½"-thick maple for more wear and less expense.

I went an extra step for the finish — four top coats of General Finishes' Royal Finish (satin).

EXPLODED VIEW

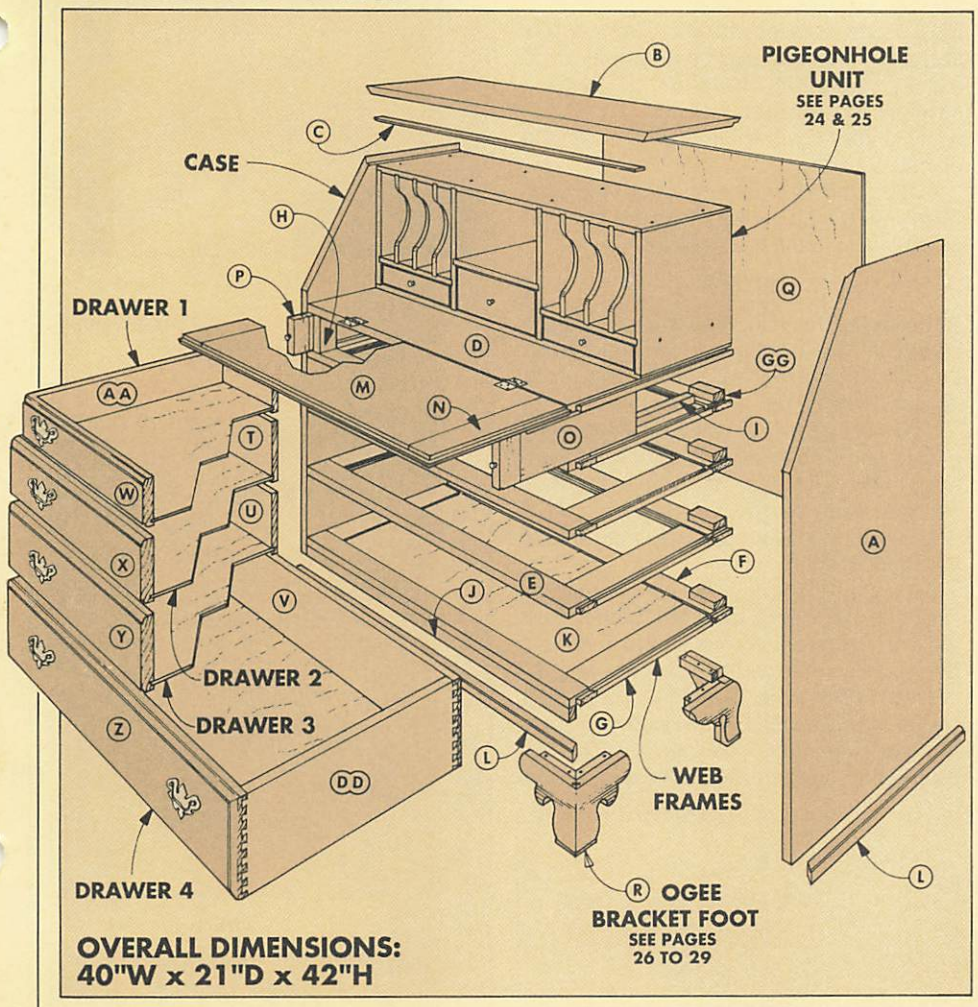

MATERIALS

CASE

A	Sides (2)	3/4 x 21 - 37 1/2
B	Top (1)	3/4 x 12 15/16 - 40
C	Top Lip (1)	3/16 x 7/8 - 38 1/2
D	Shelf (1)	3/4 x 20 3/4 - 39 1/4
E	Drawer Rails Fr. (4)	3/4 x 2 - 39 1/4
F	Drawer Rails Bk. (4)	3/4 x 2 - 39 1/4
G	Drawer Runners (8)	3/4 x 2 3/4 - 17 1/2
H	Dividers (2)	3/4 x 2 - 4 1/8
I	Drawer Guides (2)	3/4 x 3/4 - 16 1/2
J	Rail Lip (1)	3/4 x 1 - 38 1/2
K	Dust Panel (1)	1/4 ply - 34 3/4 x 17 1/2
L	Molding Strip (1)	1/2 x 1 1/16 - 96 (rgh)
M	Door Panel (1)	3/4 x 15 - 35 1/8
N	Door Ends (2)	3/4 x 2 1/2 - 15
O	Door Supports (2)	3/4 x 3 9/16 - 18
P	Door Supp. Ends (2)	3/4 x 2 - 3 9/16
Q	Case Back (1)	1/4 ply - 36 1/8 x 39 1/4
R	Ogee Foot Blanks (3)	1 1/2 x 5 1/4 - 16

DRAWERS

S	Drawer 1 Back (1)	1/2 x 3 1/2 - 35 1/4
T	Drawer 2 Back (1)	1/2 x 4 3/8 - 38 3/8
U	Drawer 3 Back (1)	1/2 x 5 1/4 - 38 3/8
V	Drawer 4 Back (1)	1/2 x 6 1/8 - 38 3/8
W	Drawer 1 Front (1)	3/4 x 3 1/2 - 35 1/4
X	Drawer 2 Front (1)	3/4 x 4 3/8 - 38 3/8
Y	Drawer 3 Front (1)	3/4 x 5 1/4 - 38 3/8
Z	Drawer 4 Front (1)	3/4 x 6 1/8 - 38 3/8
AA	Drwr 1 Sides (2)	1/2x 3 1/2 -19 3/8
BB	Drwr 2 Sides (2)	1/2x 4 3/8 -19 3/8
CC	Drwr 3 Sides (2)	1/2x 5 1/4 -19 3/8
DD	Drwr 4 Sides (2)	1/2x 6 1/8 -19 3/8
EE	Drwr 1 Bott (1)	1/4 ply - 34 3/4 x19 1/4
FF	Drwr 2, 3, 4 Bott (3)	1/4 ply - 37 7/8 x19 1/4
GG	Drwr Stop Blks (8)	3/4 x 1 1/4 - 3

CUTTING DIAGRAM

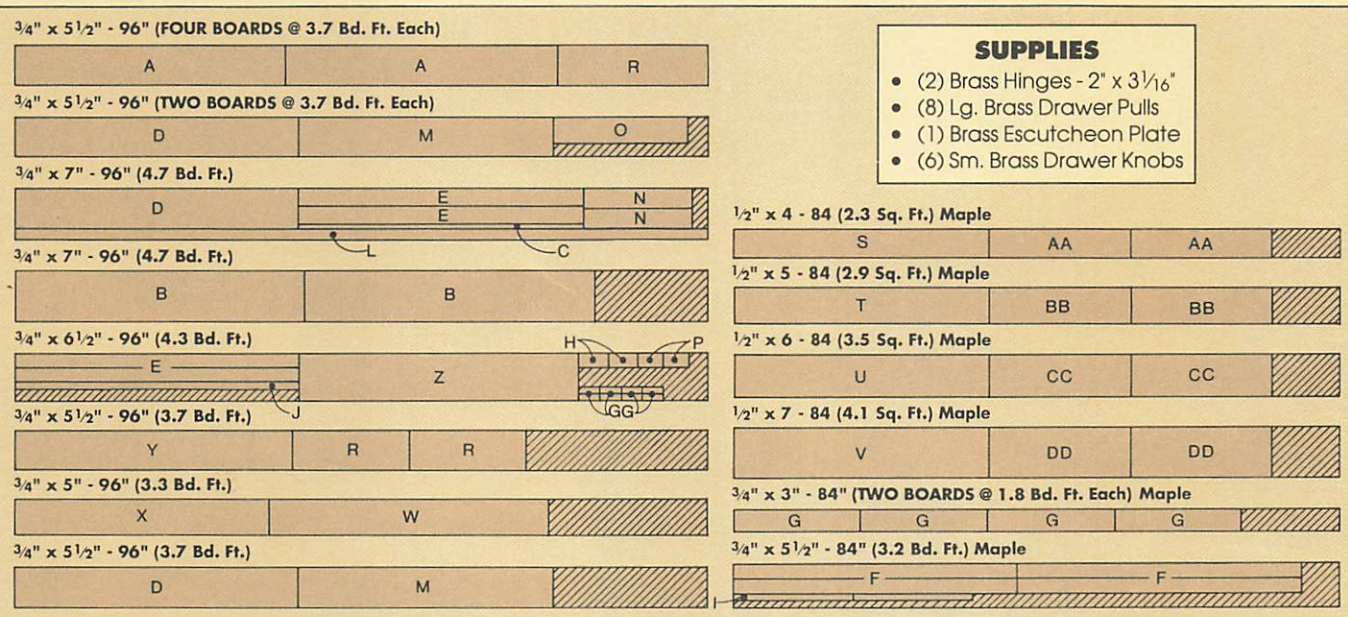

SUPPLIES

- (2) Brass Hinges - 2" x 3 1/16"
- (8) Lg. Brass Drawer Pulls
- (1) Brass Escutcheon Plate
- (6) Sm. Brass Drawer Knobs

ALSO NEED: One 4x8 Sheet 1/4" Maple Plywood, plus One 4x4 Sheet 1/4" Cherry Plywood NOTE: Materials for Pigeonhole Unit on Page 24

CASE SIDES & TOP

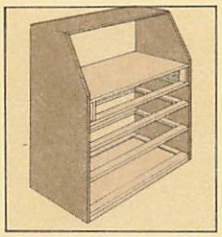

I started work on the Slant Front Desk by building three solid panels for the outside case, see Fig. 1. But building a project with solid wood panels calls for some planning. Since each of the panels must be glued up from several boards, it's important to select these boards from stock that looks like it came from the same board. (For tips on gluing up large panels, see the article on page 11.)

CUT TO ROUGH SIZE. After gluing enough boards together for three oversize blanks (two for the sides and one for the top), cut the **sides (A)** to finished width and rough length (39"), see Fig. 1. (The sides will be cut to finished length after the rabbeted miter joint is cut across the top.)

Then cut the **top (B)** to rough width (13¾") but finished length (40"), see Fig. 1.

Note: The top end of the sides and the front edge of the top should be finish-quality cuts. That is, flat, smooth, and square to their adjacent edges.

RABBETED MITER JOINT. In order to hide the end grain where the case sides meet the top, I used a variation of a miter joint, see box at right. A common miter joint would work, but by rabbeting the miter, the joint is stronger and assembly is easier. (The pieces won't shift as much when they're glued and clamped together.)

Cut the rabbeted miter joint on *both* ends of the top (B) and the *top* end of the sides (A) as explained in the box at right.

SIDES

After cutting the rabbeted miter joint, cut the sides (A) to finished length, see Fig. 1. Note: Do this by cutting off the bottom ends square to the edges.

The sides of the case are held together by a shelf and web frames that are built later, refer to Fig. 8 on page 20. To hold the shelf and web frames in place (and also allow the solid wood sides to move), sliding dovetail joints are used.

This joint involves a dovetail tongue on the ends of the shelf (and web frames) that locks in a dovetail groove on the insides of the case sides. (Refer to the box on page 21.)

LAY OUT DOVETAIL GROOVES. The frames that fit in the dovetail grooves do more than hold the sides of the case together. The web frames also support the drawers inside the

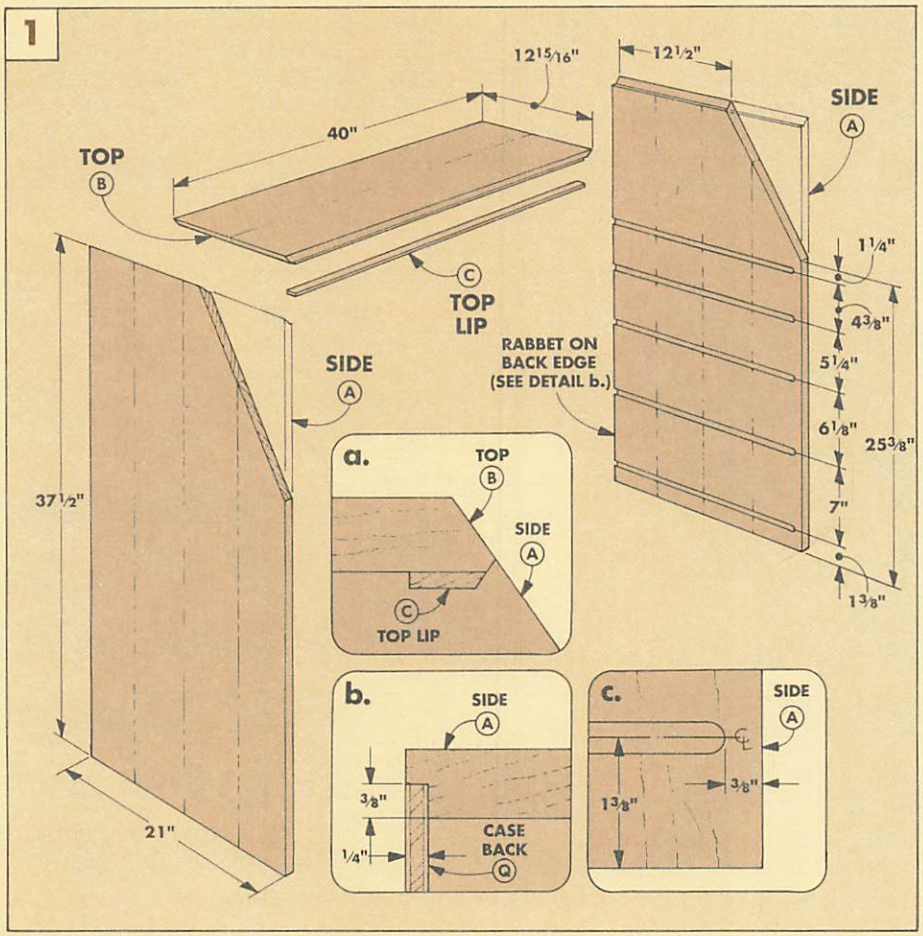

RABBETED MITERS

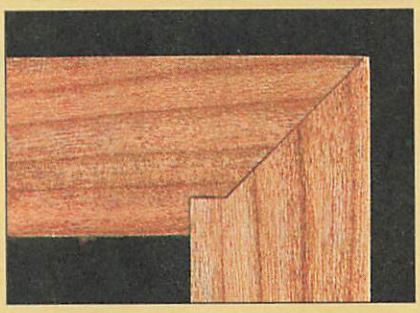

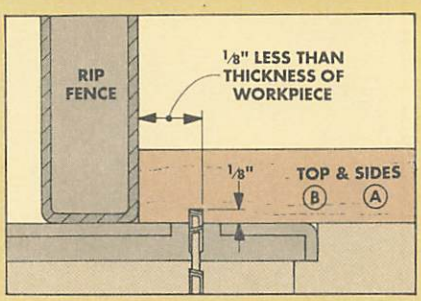

The rabbeted miter joint starts out the same on all the mating pieces (the top and side panels). Cut a 1/8"-deep kerf across the inside face of all three pieces.

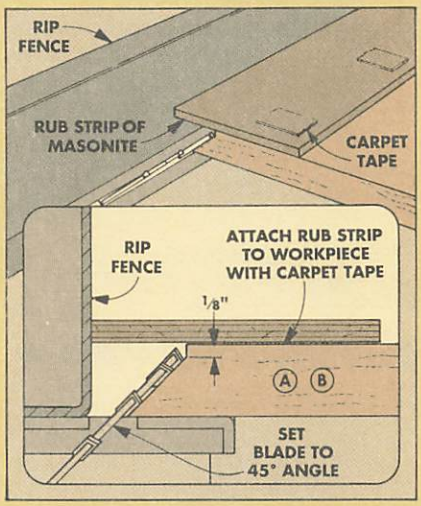

Cutting the miter is critical — the blade must align to the kerf. To help, stick a piece of Masonite to the workpiece. Then adjust the fence and sneak up on the cut.

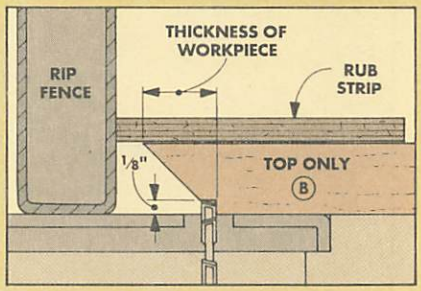

The last cut is a rabbet on the top piece only. Again use the Masonite rub strip, but this time to help position the blade in relation to the long point of the miter.

case. And since all the drawers are different heights, the dovetail grooves are different distances apart.

To lay out the position of the dovetail grooves, measure up from the bottom of the case sides, see Fig. 1. Then draw a line across the inside face of each side panel to indicate the *center* of the dovetail grooves.

Note: Since the sliding dovetail joints are to be hidden on the front of the case, these grooves stop 3/8" from the front edge, see Figs. 1 and 1c.

ROUT DOVETAIL GROOVES. Now the dovetail grooves can be routed. To do this, I used a 1/2" dovetail bit and guided the router along a straightedge clamped to the workpiece, see Fig. 2. (Refer to Shop Notes on page 15 for information on building a self-aligning router edge guide.)

Now rout the five stopped dovetail grooves on each of the sides, see Fig. 2.

ANGLED CORNERS. After the dovetail grooves have been routed, the next thing to do is cut off the front corners at a 35° angle to produce the slant front, see Fig. 3.

To do this, first lay out the angle on both of the case sides, refer to Fig. 1. Then the angle is cut in two steps. First, cut to within about 1/16" of the line. (Make this rough cut on both side panels.)

To get the same angle on both side panels, they could be clamped together and hand planed to the mark. But I did something different. After the rough cut, I clamped a straightedge along the pencil line (on the *right-hand* panel) and used a flush trim bit in the router to complete the cut and smooth the edge, see Fig. 3. Shop Note: To avoid chipout along the edge, rout from the lower corner to the upper corner.

To cut the second (left-hand) side panel identical to the first, I clamped the two panels together so they were flush along the top, back, and bottom edges. Then I ran the bearing of the flush trim bit along the smooth edge of the first panel to trim a matching edge on the second panel.

RABBET. Finally, cut a rabbet along the back edge of the side panels to accept a plywood back panel, see Figs. 1b and 2.

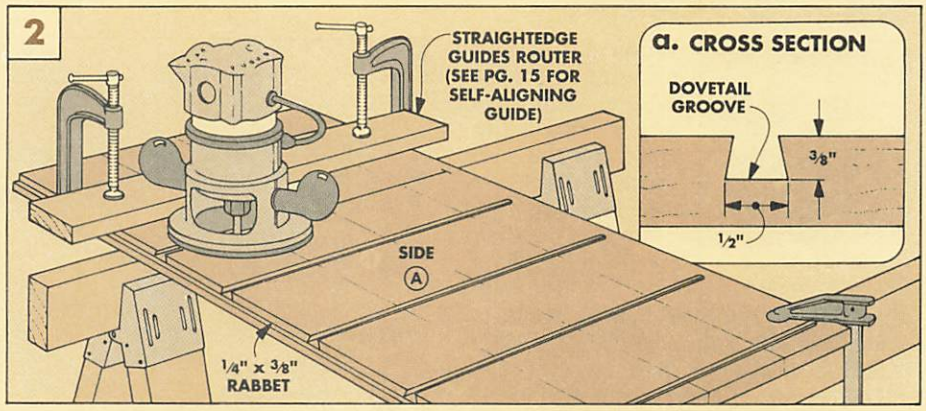

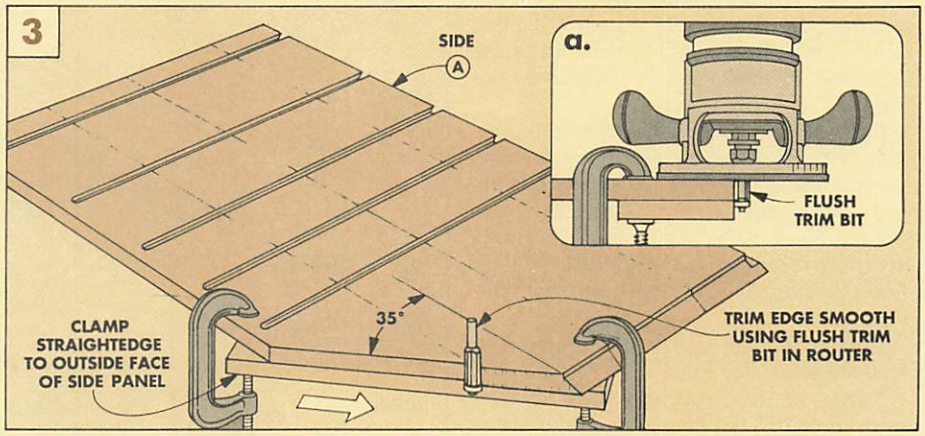

TOP

After flush trimming the angle on both side panels, set the panels aside and work can continue on the case top (B).

ATTACH LIP. Before cutting the case top to finished width, I first glued a thin **top lip (C)** to the underside of the front edge, see Figs. 1a and 4. This lip acts as a stop when the pigeonhole unit is installed inside the assembled case, refer to Fig. 5 on page 25.

RIP TWO BEVELS. After attaching the top lip, rip a 35° bevel along the front edge of the case top, see Figs. 5 and 6. Note: The angle of this bevel must be exactly the same as the angle on the two side panels so the door will fit tight to the case when it's closed.

Cut this bevel with the *top* face against the table, see Fig. 5.

Next, rip an intersecting bevel along the front edge, this time with the *bottom* face against the table, see Fig. 6. Note: Because of the lip on the front edge, the workpiece won't lie flat on the table for this second cut. That's okay — only the angle of the first bevel is critical.

RIP TOP TO WIDTH. Now the case top can be ripped to finished width (with the beveled edge against the fence). Note: Sneak up on the finished width until the top aligns to the sides at the front and back edges, see Fig.1.

To accept a plywood panel for the back of the case, cut a rabbet along the lower back edge of the top piece, see Fig.7.

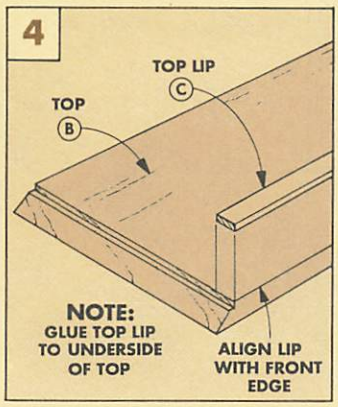

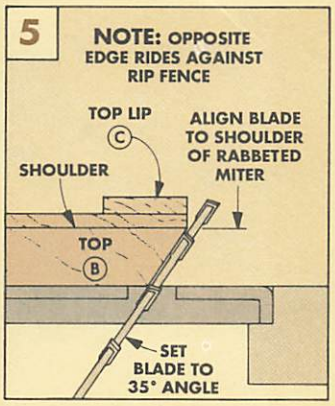

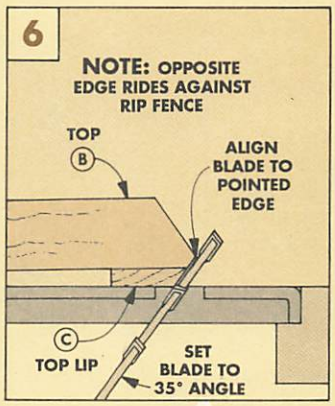

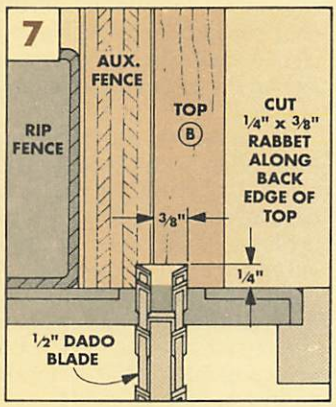

SHELF & FRAMES

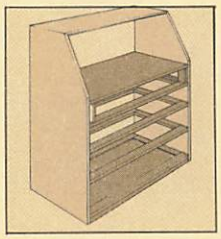

When I finished building the case sides and top, I began work on the shelf and the web frames that hold the sides together.

SHELF. The **shelf (D)** is built from glued-up stock just like the case sides and top. Then it's ripped to finished width to match the width of the sides (less the width of the rabbet for the back panel), see Fig. 8.

To determine the finished length of the shelf, measure across the underside of the top, from the shoulder to shoulder. To this dimension add the combined depth of the opposing dovetail grooves (¾"). Now cut the shelf (D) to this length.

FRAMES. All four web frames are built the same way. Two side drawer runners fit between a front and a back rail with stub tenon and groove joints, see Figs. 8 and 9.

Note: Since the back rails and drawer runners will be hidden, I used a less expensive wood (maple). But for the visible front rails, I used cherry.

Start by ripping all the frame pieces to finished width, see Fig. 8.

Next, cut the **front** and **back drawer rails (E** and **F)** to finished length to match the length of the shelf (D).

To determine the length of the **drawer runners (G)**, measure from the front edge of the case side to the shoulder of the rabbet at the rear. Then subtract the width of both drawer rails. To this number add 1" (for a ½"-long tenon on the end of each runner), then subtract ¼" (for an expansion gap where the runners meet the back rail).

GROOVES & TENONS. The next step is to cut a groove centered on the inside edges of all the frame pieces, see Fig. 9. Note: Cut these grooves to match the thickness of the ¼"-thick plywood to be used as a dust (and rodent) barrier for the lower panel.

Now cut stub tenons on both ends of all the drawer runners, see Figs. 8 and 9.

SLOT MORTISES. A pair of vertical dividers separate the top drawer from the two sliding door supports, refer to Fig. 8 and the Exploded View. These dividers have stub tenons on the ends that fit into slot mortises, refer to Figs. 10, 11, and 15.

TOP DIVIDERS. After routing the mortises, I ripped two **dividers (H)** to finished width to match the front rails, see Fig. 11. To determine the length of the dividers, measure between the centers of the top two dovetail grooves and subtract ¼".

After cutting the dividers to length, cut the stub tenons on the ends, see Fig. 11.

DRAWER GUIDES. Next, I cut a pair of **drawer guides (I)** for the top drawer to ride against, see Figs. 8 and 11.

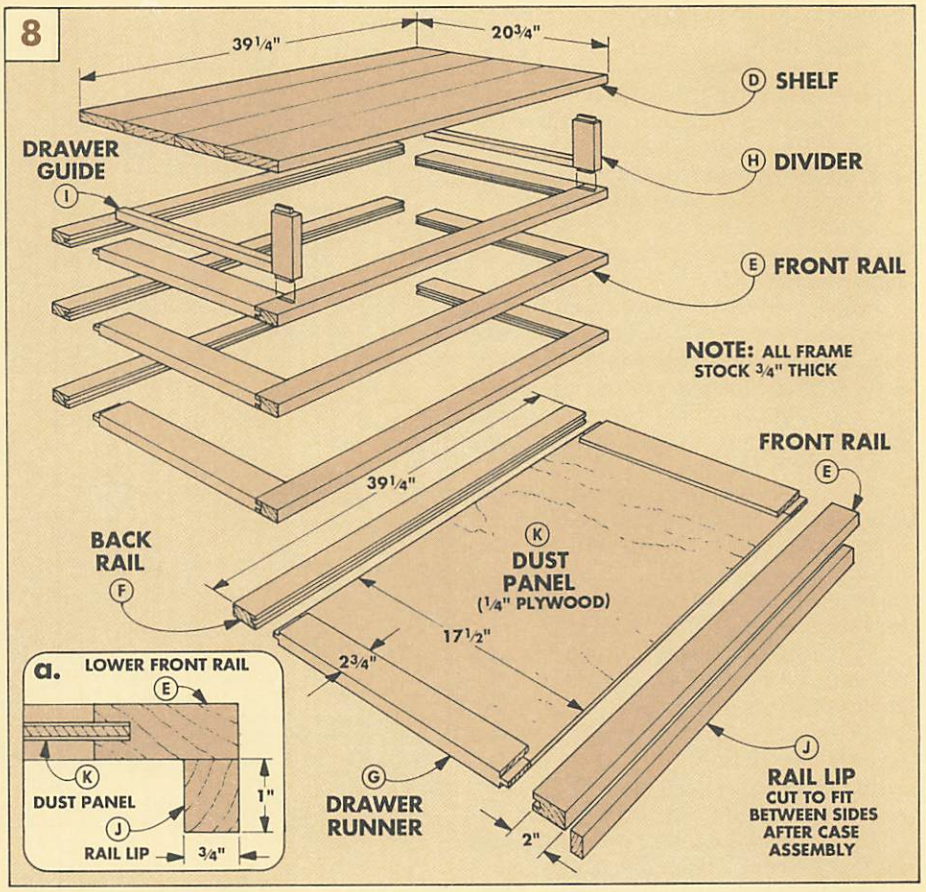

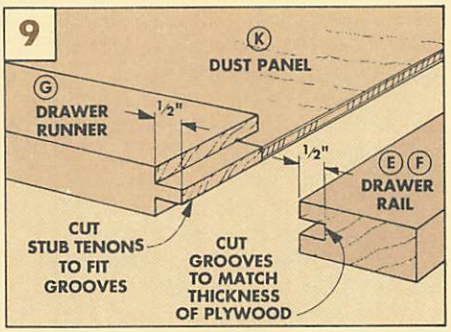

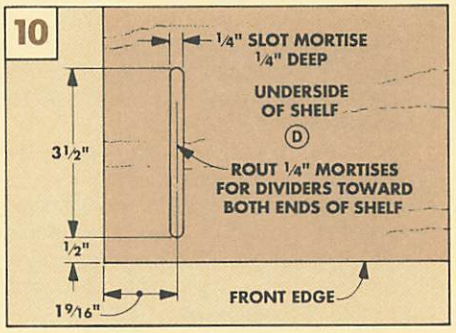

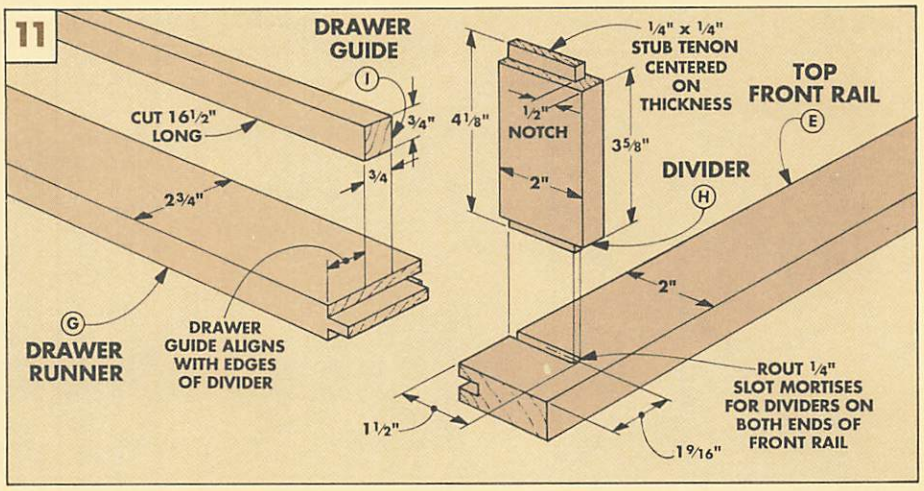

DOVETAIL TONGUES. Now I routed the dovetail tongues that fit the dovetail grooves in the case sides (A), see box at right.

Note: Rout dovetail tongues on the ends of all eight web frame rails, see Fig. 12. Also, rout a tongue on both ends of the shelf (D) and on the edges of the drawer runners.

NOTCHES. Before the front rails (E) and shelf (D) can be glued in place, notches must be cut at the ends, see Fig. 12. Also notch the front edge of both dividers (H), see Fig. 11.

RAIL LIP. Next cut a narrow **rail lip (J)** to fit between the shoulders of the front rail of the bottom web frame, see Figs. 8 and 8a. (This supports molding attached later.)

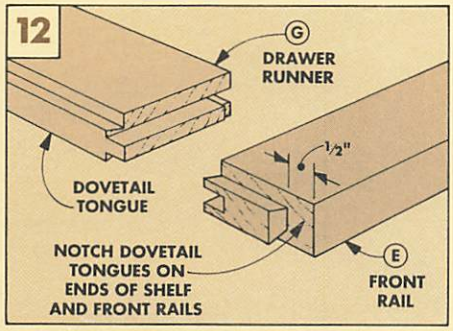

SLIDING DOVETAIL JOINT

A sliding dovetail is a two-part joint. Even without glue, the angled sides of the tongue fit the angled walls of the groove exactly. It's a strong way to join two pieces of wood.

Routing both parts of the joint must be precise — a tight fit holds the project together. But the joint shouldn't be *too* tight. (You must be able to assemble the parts.)

The secret to the best fit is sneaking up on the final cut until the tongue just fits the groove. To help, I built a tall fence (page 14).

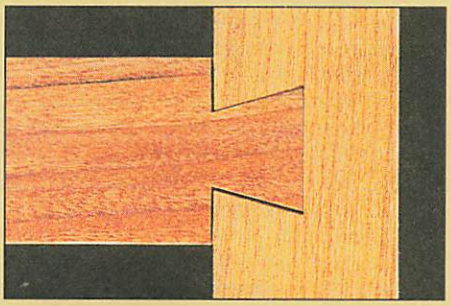

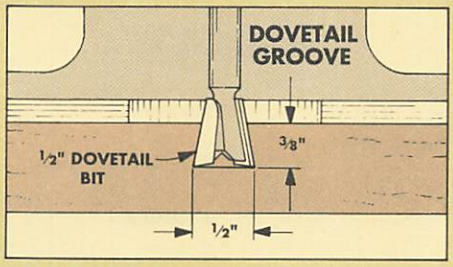

GROOVES. Dovetail grooves are routed with a hand-held router. Set depth of cut and then run router against a straightedge.

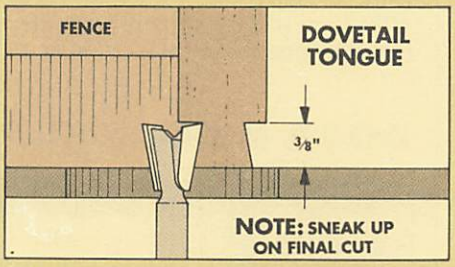

TONGUES. Dovetail tongues are routed on the router table. The height of the bit matches the depth of the dovetail groove.

CASE ASSEMBLY

Here's where all the parts get joined to create the carcase of the desk.

Shop Note: Because the solid wood sides must be allowed to expand and contract with changes in humidity, the case is assembled with glue only in certain spots, see Fig. 14. Don't put glue on the tongue of the front rail. (It will scrape off in the dovetail groove.) Instead, apply glue to the front end of the groove. Also, do not apply glue to the tongues on the edges of the drawer runners.

ASSEMBLY. Start assembling the case by sliding the shelf (D) in place in the upper dovetail groove. This holds the sides together while the web frames are installed. There's a sequence for installing the frames.

With the shelf in place, continue by sliding in the front drawer rail until the front edges are flush. Next slide in both drawer runners so the tongues at the front fit into the grooved edge of the front rail, see Fig. 14.

PLYWOOD PANEL. Now cut a **dust panel (K)** the same length as the drawer runner to fit inside the web frame. Note: I installed a panel only in the lower web frame. But since the other frames have grooves to accept a panel, you could install a panel in these as well. (Extra panels add weight and cost.)

Finally, slide in the back rail. This should fit flush to the shoulder of the rabbet for the back panel. Note: There should be a ¼" gap between the back of each runner and the front edge of this rail. This lets the case sides contract without splitting the frames.

TOP WEB FRAME. The assembly sequence for the top web frame is a little different than for the lower frames. The difference is the dividers (H). These are glued in the mortises between the shelf and front rail before the drawer runners are installed, see Fig. 15. Here, the extra-long mortises (on the underside of the shelf) permit the tenons to slide in even though the rail and shelf are in place.

Now install the remaining sections of the top web frame as you did the lower frames. Then install the top (B) between the sides.

UPPER GUIDES & RAIL LIP. Complete assembly of the case by gluing the drawer guides (I) onto the upper frame runners, see Figs. 8 and 11. Also, glue on the rail lip (J), see Figs. 8 and 8a.

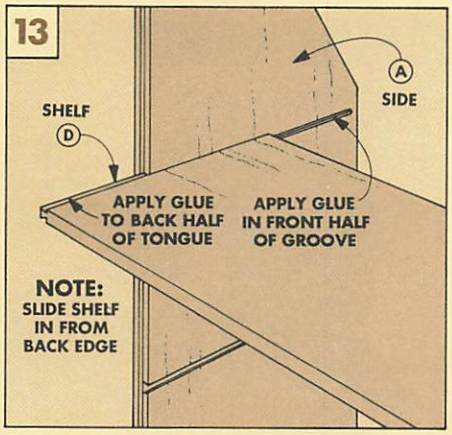

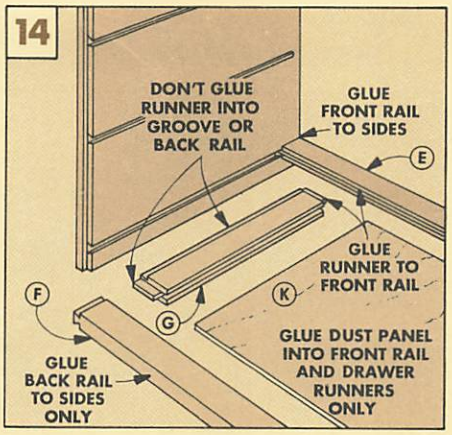

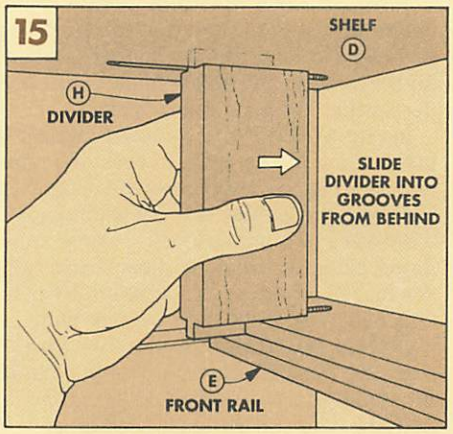

OGEE FEET & MOLDING

A Chippendale piece of furniture like this is distinguished by its short, sculptured feet (called ogee bracket feet). On page 26 we're showing how to build the ogee bracket feet.

MOLDING STRIP. After making and installing the feet, cut a blank for the **molding (L)** to finished width and rough length, see Fig. 16. Then rout a profile along the edge with a 3/8" round-over bit, see Fig. 16a.

Now miter the molding to fit around the front and sides of the case. Glue on the front strip, but for the side strips only apply glue to the mitered corner. Anchor the back part of the strips with screws from inside the case through slotted shank holes, see Fig. 16.

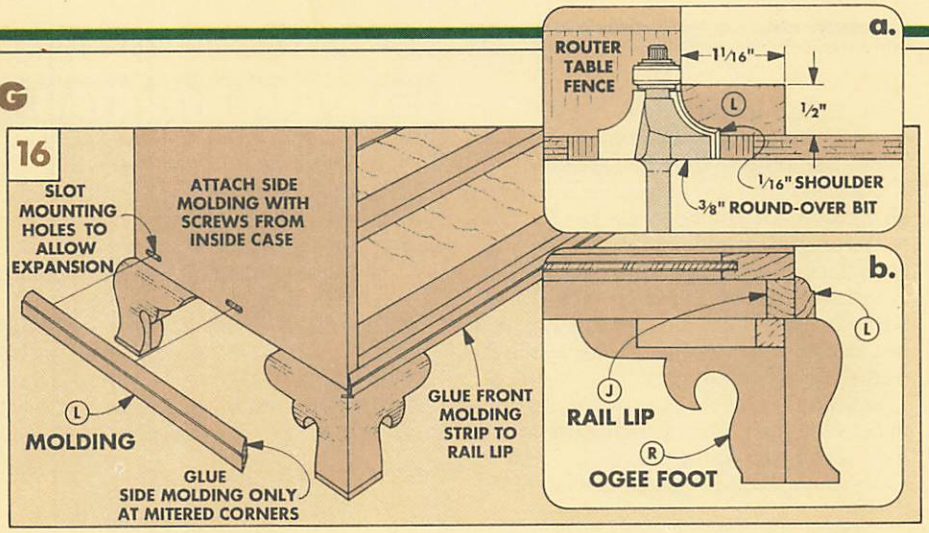

DOOR & DOOR SUPPORTS

The fold-down door is made up of three pieces — a glued-up panel and two "breadboard" ends, see Fig. 17.

DOOR ENDS. After the **door panel (M)** is trimmed to finished size, cut a pair of **door ends (N)** to length (to match the width of the panel).

TONGUES, GROOVES & RABBETS. Now the door ends are joined to the door panel with tongue and groove joints, see Figs. 17 and 17b. Note: To allow the wide panel to expand and contract, the ends are glued only along the middle third of the tongues, see Fig. 17.

After the door unit is built, rout a round-over (with a small shoulder) around all four edges on the *outside* face, see Fig. 17a.

Then, to allow the door to fit inside the door opening, rout a rabbet on the *inside* face of three edges, see Fig. 17b. (*Don't* rabbet the bottom edge.)

DOOR SUPPORTS. Now rip a pair of **door supports (O)** to width 1/16" less than the height of the opening to fit between the case and dividers. Then cut the door supports to finished length, see Fig. 18.

Next, cut a pair of **support ends (P)** to length to match the width of the supports, see Fig. 18. Then rip the support ends to finished width, and attach them to the supports with tongue and groove joints.

RELIEF NOTCH. Next I routed a shallow notch along the top edge of each door support, see Fig. 19. This allows the support to slide with a minimum amount of binding.

DOWEL PIN & BRASS KNOB. Now glue a dowel pin into each door support as a stop, see Fig. 20. Then a small brass knob can be attached to the front of the support end.

INSTALL DOOR. Before starting on the drawers, I installed the door with a pair of brass hinges mounted flush to the surface of both the door and the shelf, see Fig. 21.

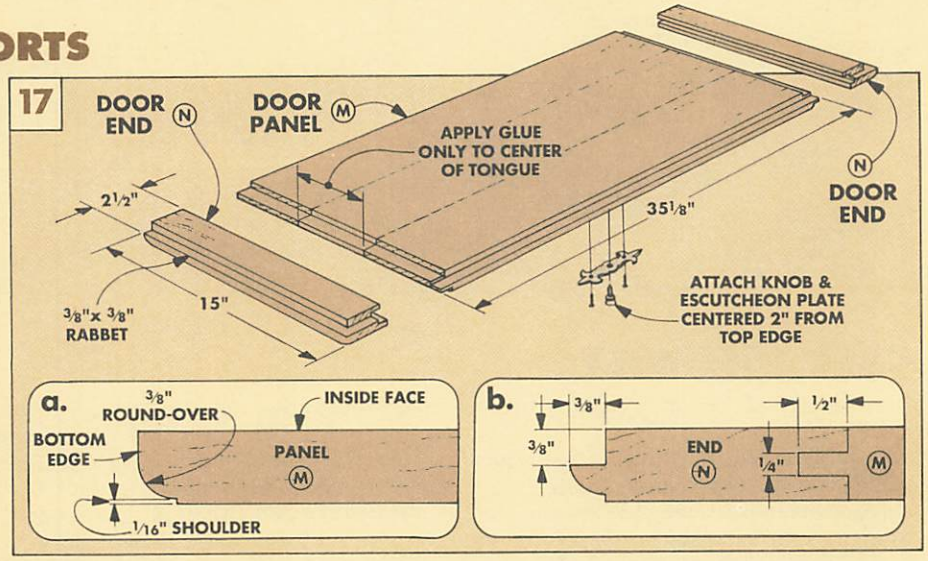

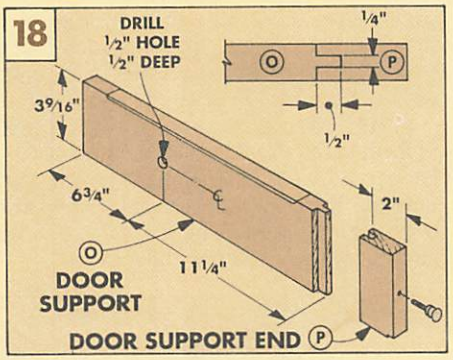

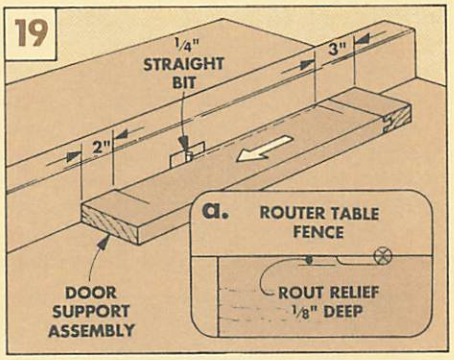

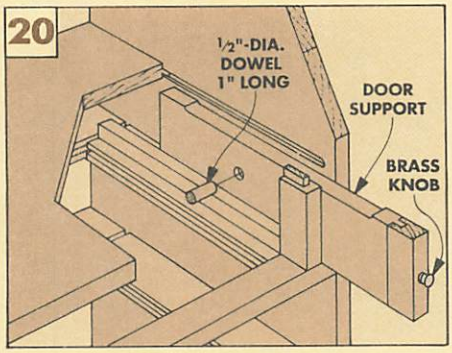

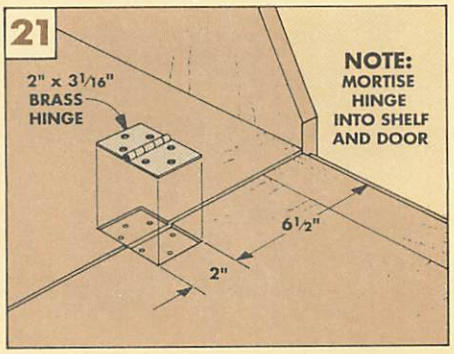

DRAWERS

At this point the project becomes more like an ordinary cabinet with dovetail-joined drawers. There's only one small difference. On most chests of drawers, all the drawers are the same width. On this desk, all the drawers are the same width *except* the top drawer (because of the door supports).

DRAWER PARTS. I began the drawers by cutting the **drawer backs (S, T, U, V)** 1/8" smaller in each dimension than the drawer openings, see Fig. 22. Note: I used 1/2"-thick maple for all the drawer backs and sides.

Next, cut the **drawer fronts (W, X, Y, Z)** to the same size as each drawer back. (I used 3/4"-thick cherry for the drawer fronts.)

After that, cut eight **drawer sides (AA, BB, CC, DD)** to the same height as the fronts and backs. Note: Cut the sides 1 5/8" *shorter* than the depth of the drawer openings. This allows for the stop blocks (GG), plus 1/8" for the drawer backs, see Fig. 22a. It also allows for a 3/8" overhang on the front when the drawers are closed, see Fig. 22b.

DOVETAIL JOINTS. After cutting all the drawer parts to finished size, rout half-blind dovetails on the ends of each. (I used a dovetail jig with a router and a 1/2" dovetail bit.)

Before assembling the drawers, rout a 1/4"-deep groove around the lower inside face of each drawer part to accept a 1/4" plywood bottom, see Fig. 22. (Note: Measure your plywood and cut the groove to this size — 1/4" plywood is usually *less* than 1/4" thick.)

ROUND-OVERS. Also, rout a round-over around the face of each of the drawer fronts, see Fig. 22b. This profile should match the profile around the door, see Fig. 17a.

DRAWER BOTTOMS. Now cut the **drawer bottoms (EE, FF)** to fit, and glue up the drawers. (Note: I used 1/4" maple plywood for the drawer bottoms with the grain direction running from front to back. You could cut the bottoms so the grain runs from left to right, but it will take extra plywood.)

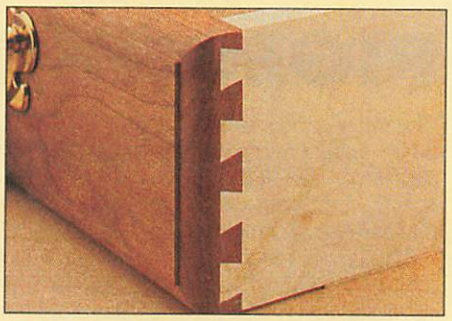

▲ *Half-blind dovetails are customary on a well-built drawer. We routed the joints using a hand-held router and a dovetail jig.*

GLIDES & STOPS. To keep each drawer centered in its opening, I glued thin drawer glides to the sides of the case and runners, see Fig. 23. Finally, cut and glue a pair of **drawer stop blocks (GG)** to the back rail for each of the drawers, see Fig. 24.

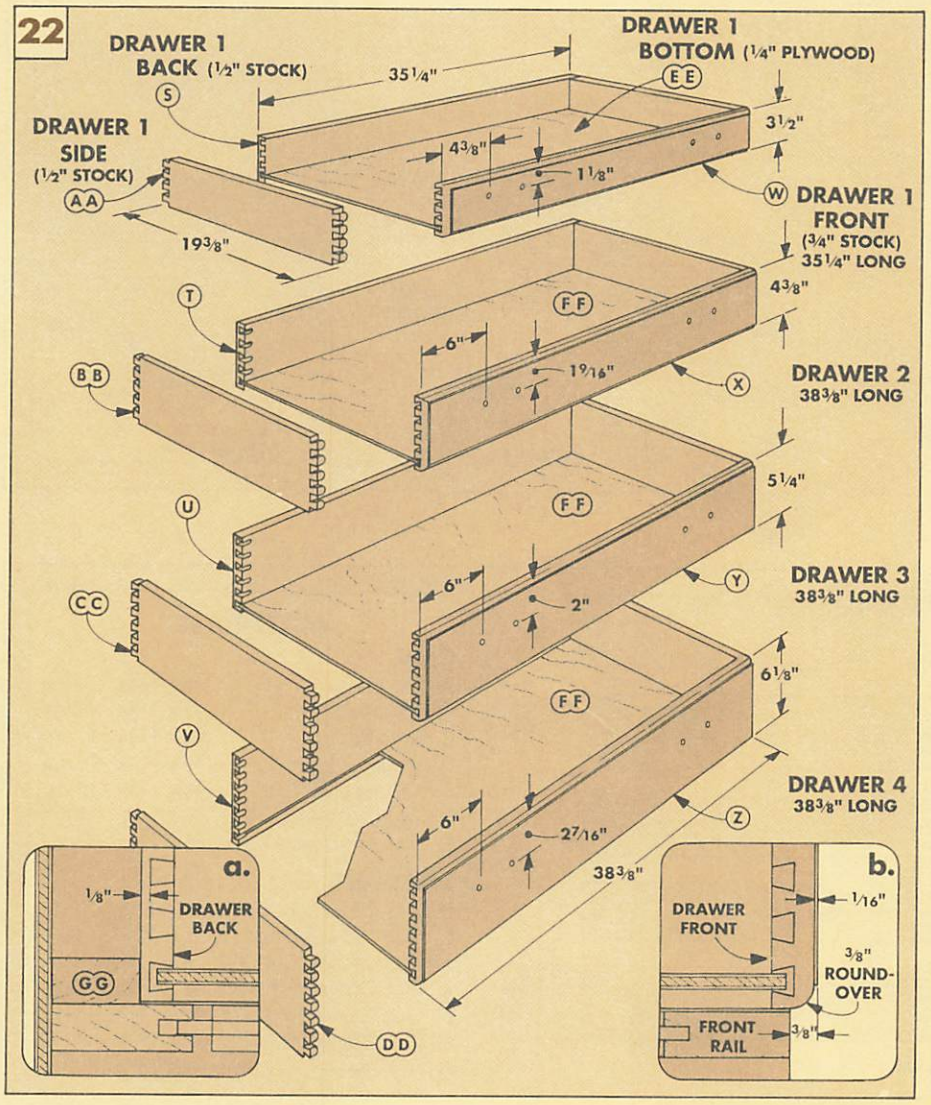

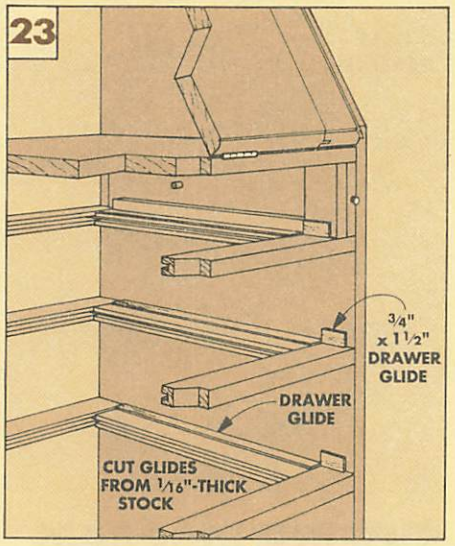

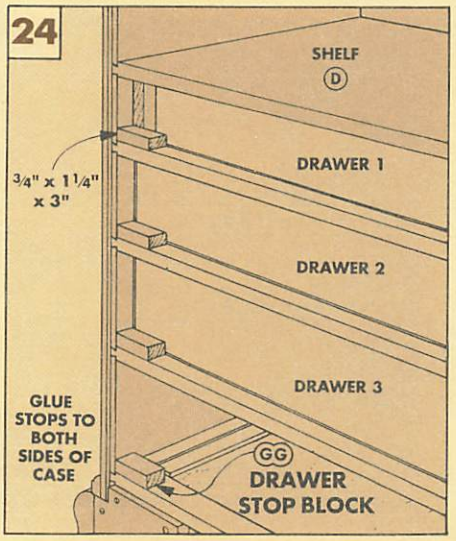

PIGEONHOLE INSERT

The top of a desk can get awfully cluttered. So it's helpful to have a way to organize the stuff inside. That's the reason for this pigeonhole unit, see photo. It's a separate assembly that slides into the desk from behind.

The unit is just a large egg-crate divider made from 3/8"-thick stock. (I started with 1/2"-thick cherry and planed it to 3/8" thick.) Two compartments have vertical dividers that fit into dadoes in the horizontal pieces.

But the best part are the drawers. These are just boxes that slide into three of the openings. Note: If you have something especially valuable to hide, you can add a hidden compartment behind the middle drawer. (For more on this see Shop Notes, page 15.)

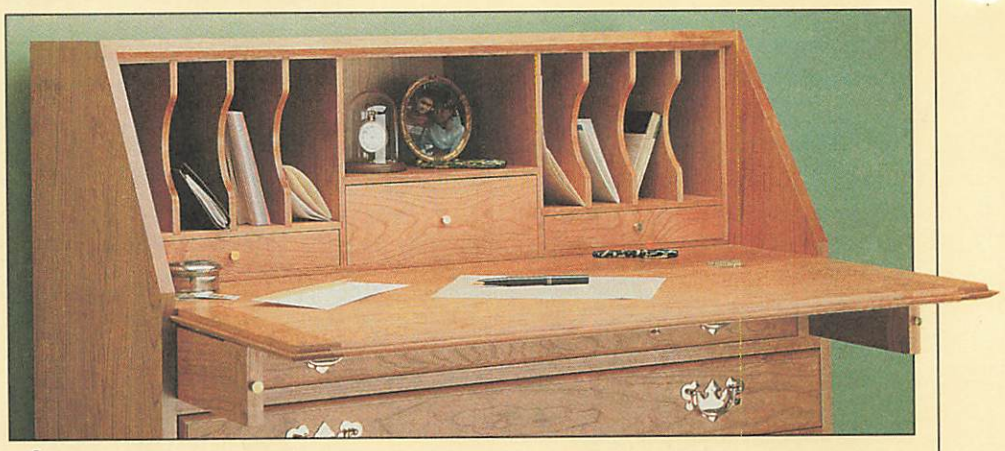

EXPLODED VIEW

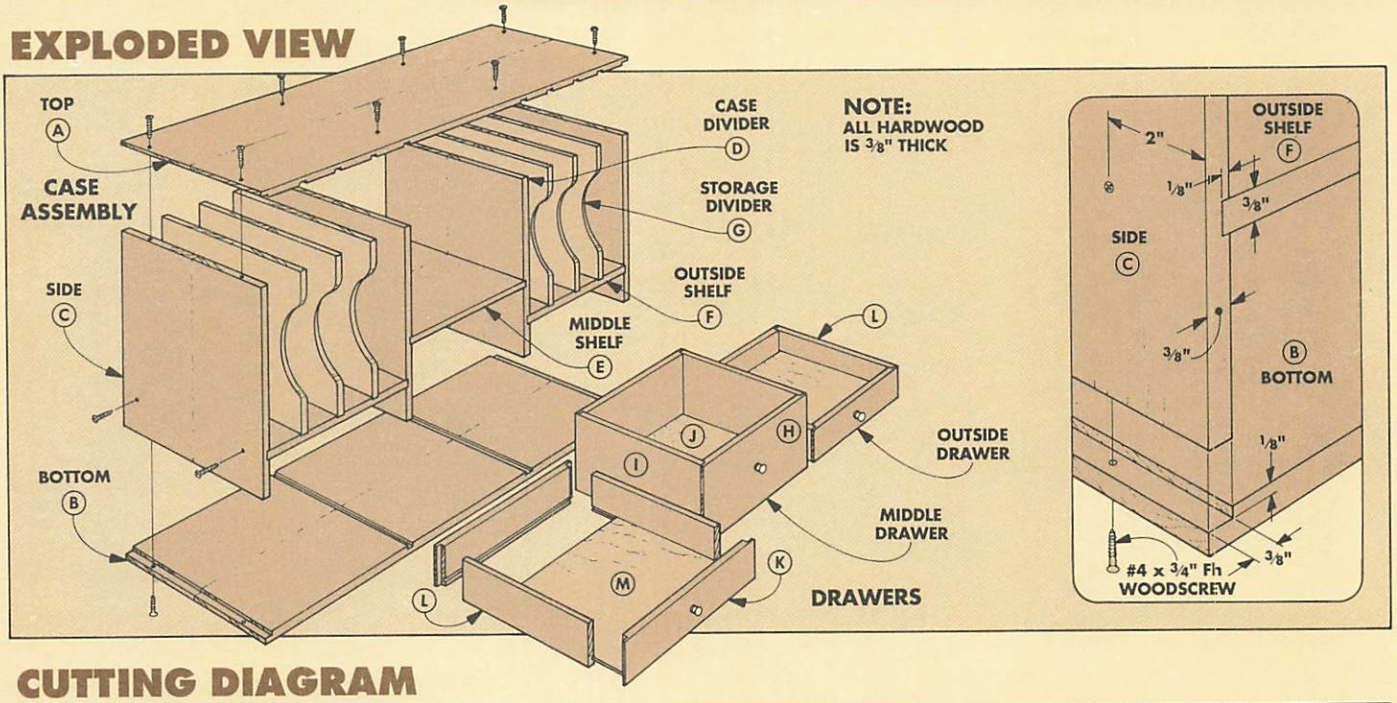

CUTTING DIAGRAM

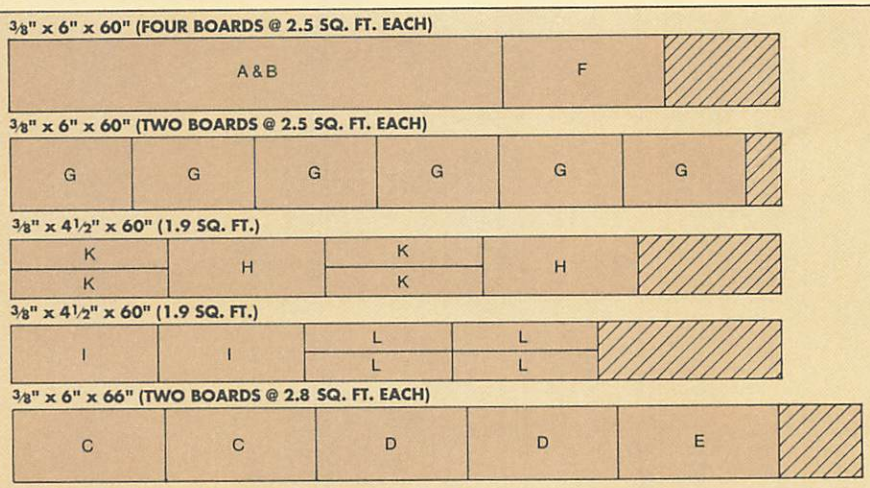

ALSO NEED: 1/4" PLYWOOD LEFT OVER FROM DESK BACK

MATERIALS

CASE

A	Top (1)	3/8 x 11 3/4 - 38 7/16
B	Bottom (1)	3/8 x 11 3/4 - 38 7/16
C	Sides (2)	3/8 x 11 3/4 - 11 11/16
D	Case Dividers (2)	3/8 x 11 3/4 - 11 11/16
E	Middle Shelf (1)	3/8 x 11 3/4 - 12 7/16
F	Outside Shelves (2)	3/8 x 11 3/4 - 12 5/8
G	Storage Dividers (6)	3/8 x 11 3/4 - 9 5/16

DRAWERS

H	Mid. Drawer Fr/Bk (2)	3/8 x 4 5/16 - 12 1/8
I	Mid. Drawer Sides (2)	3/8 x 4 5/16 - 11 1/2
J	Mid. Drawer Bott. (1)	1/4 x 11 5/8 - 11 1/4
K	Out. Drawer Fr/Bk (4)	3/8 x 11 5/16 - 12 5/16
L	Out. Drawer Sides (4)	3/8 x 11 5/16 - 11 1/2
M	Out. Drawer Bott. (2)	1/4 x 11 13/16 - 11 1/4

PIGEONHOLE ASSEMBLY

For the best fit inside the desk, I built the pigeonhole unit from the outside in.

RIP TO WIDTH. To start, first measure from the back edge of the door lip (C) to the shoulder of the rabbet at the back of the case, refer to Fig. 5. Then rip all the case parts to the same width (11¾" in my case).

CUT TO LENGTH. Next, I cut the **case top (A)** and **bottom (B)** to length to fit from side to side in the desk opening. Note: I actually cut them 1/16" less than the openings so they could slide inside but still be fairly tight.

After the top and bottom are cut to length, the **sides (C)** and **dividers (D)** can also be cut to length. To determine their length, measure the height of the desk opening and subtract ½" (since they fit in dado joints). Then subtract another 1/16" for ease of installation.

RABBETS & DADOES. When cutting the rabbets and dadoes, I cut opposing pieces at the same time. This way, all the joints will be aligned opposite each other.

SHELVES & STORAGE DIVIDERS. After the dadoes and rabbets are cut, the case can be dry assembled. Then the **shelves (E, F)** can be cut to length to fit inside the case.

Next, cut the **storage dividers (G)** to fit between the case top and outside shelves, see Fig. 3. Then, to make it easier to pull files from the compartments, I cut an arc on the front of each of the dividers, see Fig. 2.

ASSEMBLY. Now the case can be assembled with glue and No. 4 screws to hold the joints together, see the Exploded View.

DRAWERS. The last thing to do is build the drawers. Design Note: To add a hidden compartment behind a drawer as explained on page 15, that drawer must be built shallower.

The drawers are made using ⅜"-thick stock. (Again, I used solid cherry.)

First cut the **fronts** and **backs (H** and **K)** 1/16" less than the height and width of the opening, see Fig. 4. Then rip the **sides (I** and **L)** to the same height as the front/back pieces, see Fig. 4.

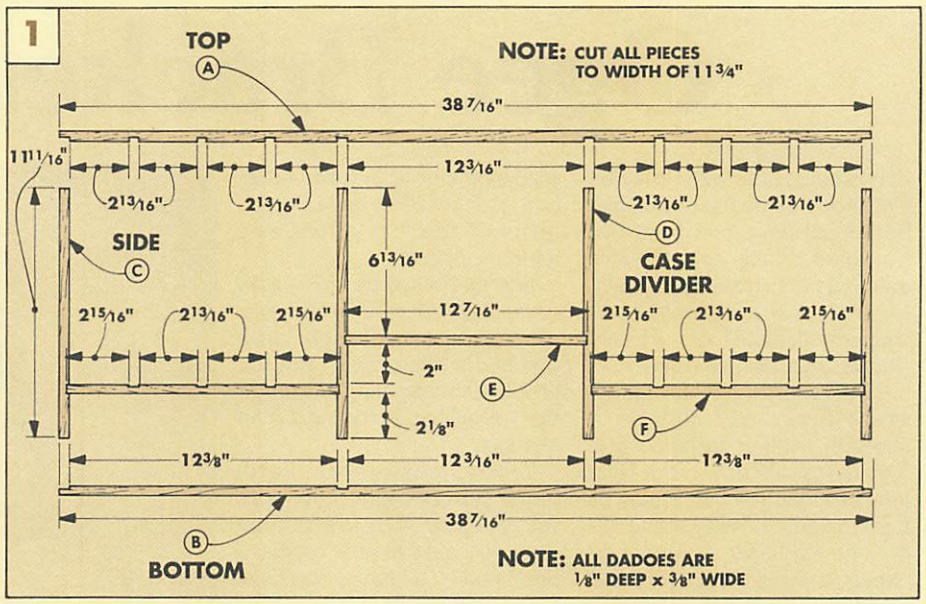

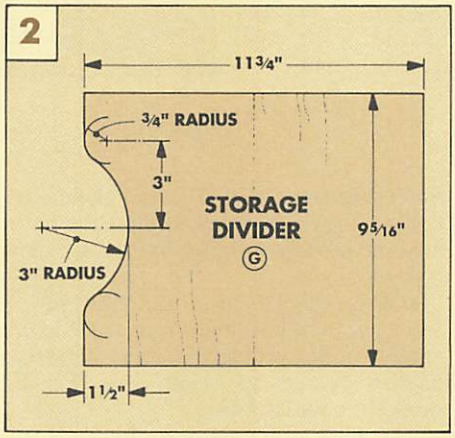

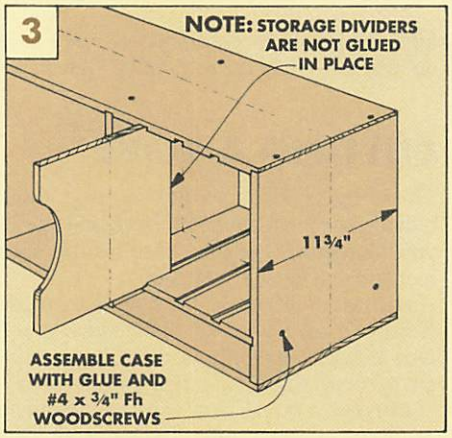

RABBETS. Next, cut a rabbet joint at both ends of each drawer front/back, see Fig. 4a. Now the sides can be cut to length to fit between the rabbets. Note: When the drawers are closed, the fronts fit flush with the case.

DRAWER BOTTOMS. I used ¼" plywood for the **drawer bottoms (J** and **M)**, see Fig. 4. Then cut a groove around the inside of the drawer parts. Finally, assemble the drawers with glue in the joints and in the grooves.

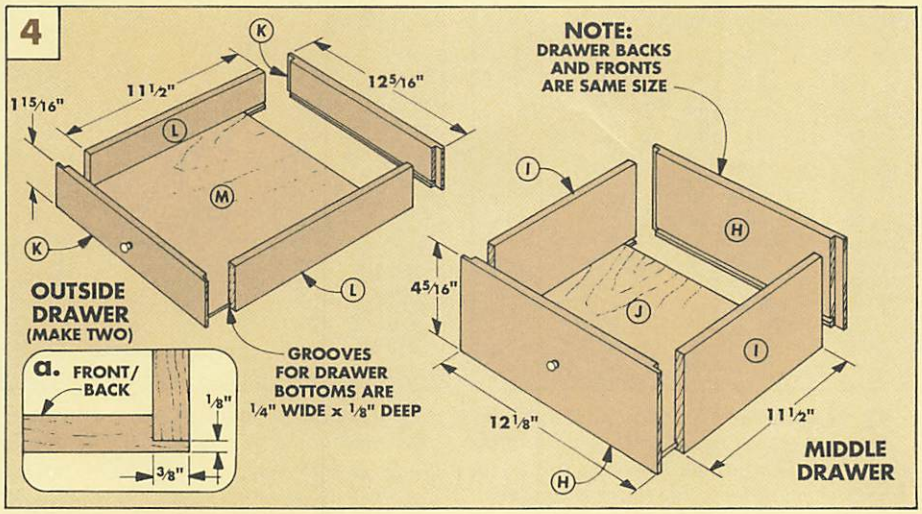

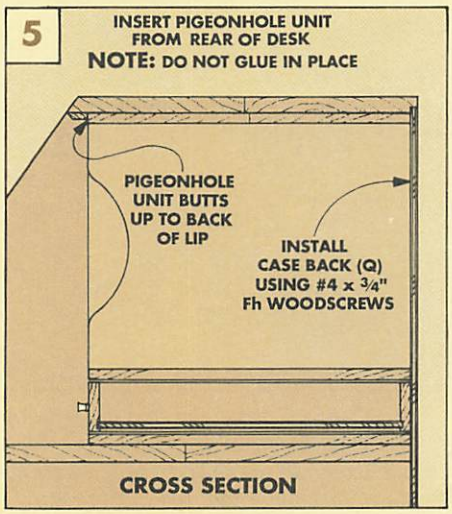

Ogee Bracket Feet

Even though the ogee bracket feet shown in the photo look like traditional ogee feet from two hundred years ago, they're much easier to make. Back then, these feet would have been shaped with hand tools — I used a table saw and a band saw.

The results are the same, great looks and plenty of strength, without the hard work.

PROFILES. When you first look at a foot like this, it may be hard to figure how it's made. It's not one big block as you might expect. Instead it's two pieces of wood joined with a miter joint.

Also, each piece has two profiles. There's a large S-shaped ogee profile cut in the face, and a scalloped cutout to form a support bracket. (For full-size patterns of these profiles, see Sources, page 31.)

POWER TOOLS. In the early days, the S-shaped profile was usually shaped with a big plane that had a huge cutter. But the problem was pushing it through the workpiece. It required a lot of effort.

Today, most of that hard, physical work can be done with the table saw. (I'll have to admit though, I did use one "modern" hand tool — a Stanley *Surform* for some final shaping.)

And originally the scallop was probably cut with a fret saw. Here, I used the band saw.

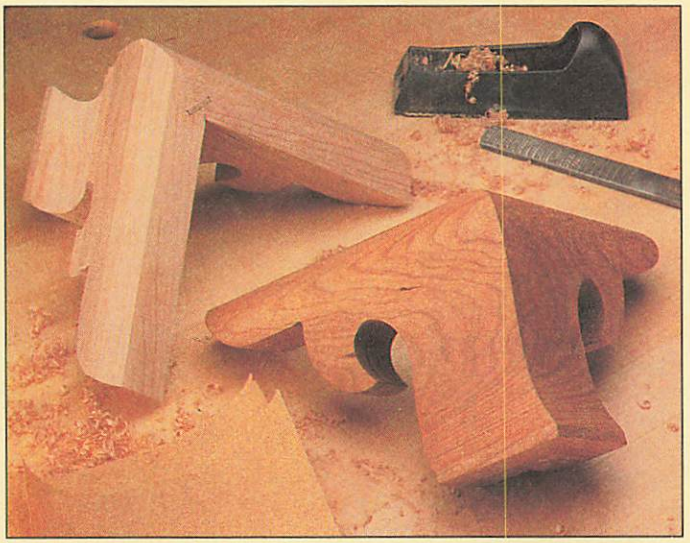

CUTTING A COVE

These ogee feet start out as long, thick blanks. For the Slant Front Desk on page 16 you'll need three blanks. One for the back feet and two for the front feet.

GLUING UP BLANKS. The blanks are made from two pieces of ¾"-thick stock glued face-to-face. Once the glue dries, they can be cut to rough size (5¼" x 16"), refer to Step 3.

CUTTING A COVE. Now work can begin on roughing out the profile. To do this, first set up the table saw to cut a cove on the front of each blank. (The cove is the concave area of the S-shaped profile.) What the blade is actually going to do is plow through the workpiece at an angle — much like a snow plow removes snow.

SAW SET-UP. To set up the table saw, a fence has to be positioned at an angle to the saw blade. The problem is determining that angle to get a certain width cove. (For the desk, the cove is 2" wide.)

The angle of the fence to the blade will change based upon the diameter of the saw blade. The angle will be steeper for a smaller diameter blade, shallower for a larger blade.

The best method I've found for setting up the fence to the correct angle is to use a template that looks like a little window. I cut it out of posterboard, refer to Step 2.

What you're actually doing with the template is figuring out what angle the workpiece must pass through the blade. Then it's simply a matter of clamping a straightedge (fence) against the template.

Once the fence is clamped in place, the cove can be cut, see Step 3.

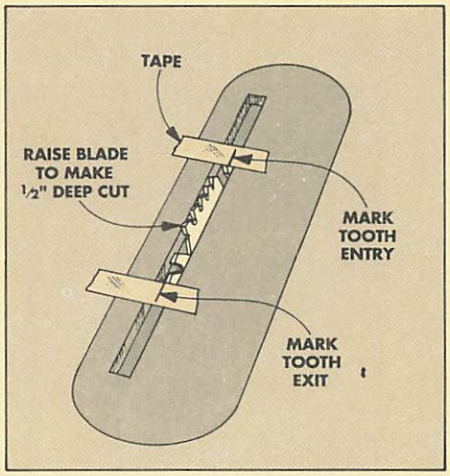

1 *To begin, raise the saw blade to the final depth of the cove (½"). Then mark on strips of masking tape where the teeth of the blade enter and exit the saw.*

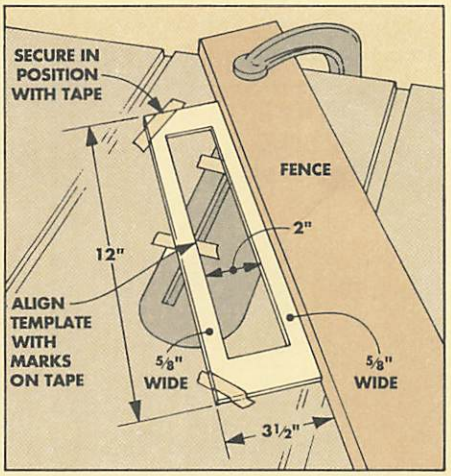

2 *Next, make a template with an inside dimension equal to the width of the cove (2"). Then angle the template so the inside edges of template touch the marks.*

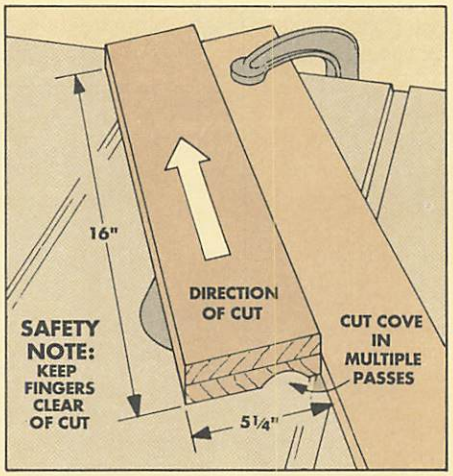

3 *Clamp the fence in place and raise saw blade to a height of 1/16". Raise blade in 1/16" increments between passes until full depth of the cove (½") is reached.*

ROUGH OUT PROFILE

With the coves cut, the next area of the S-shaped profile to work on is the convex shape near the top, outside corner. To complete this part of the profile, two things have to happen. The cove must be elongated at one end so there's a smooth transition between it and the face of the blank. And the top, outside corner has to be rounded over.

TRACE PROFILE. Before you start removing any waste, it's a good idea to mark what's waste and what's not. To do this, trace the S-shaped ogee pattern on the ends of each blank, see pattern at right. This will give you a general idea as to what the S-shaped profile will look like once the waste is hogged out.

Then to elongate the cove, I used a ½"-wide stacked dado set. A rasp or file would work, but the dado set makes it easier to take out the majority of waste, see Step 4.

FINISHED WIDTH. At this point the blanks could be cut to finished width. But, because they started out wider than necessary, the lip below the cove might be too wide. So before ripping them to finished width, first rip the blanks to leave a ¼"-wide lip, see Step 5. Then rip the blanks to finished width from the opposite edge.

ROUND-OVER. After the blanks are ripped to width, the round-over located on the top, outside corner can be roughed-out. Again I used the table saw to remove most of the waste, see Step 6. (This could also be done with a ¾" round-over bit, see page 31.) Later on, this rough profile will be smoothed over.

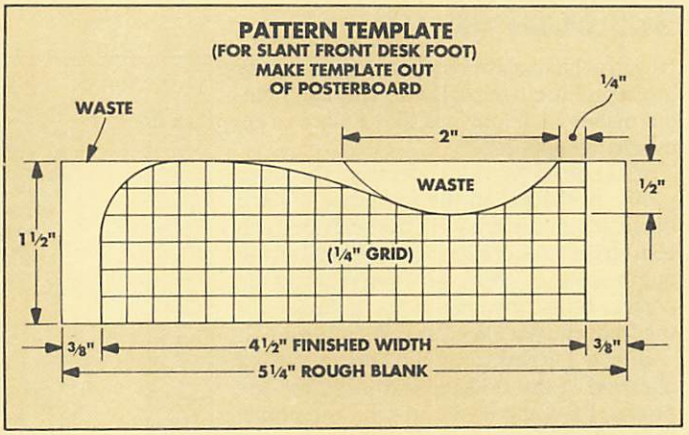

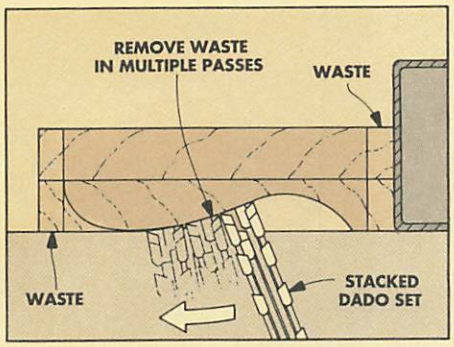

4 *Lay out pattern on ends. Then elongate cove with dado blade set at angle. Sneak up on layout line by adjusting rip fence and blade height between passes.*

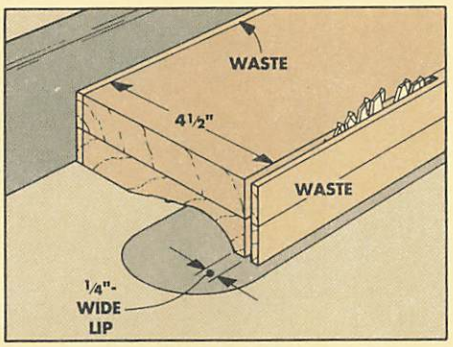

5 *Now rip a strip off the blank to leave a ¼"-wide lip along the bottom edge. Then cut each blank to finished width (4½") by ripping the opposite edge.*

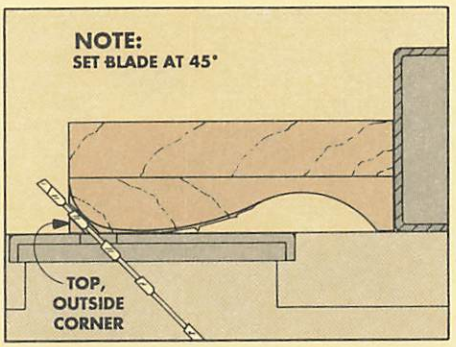

6 *The final step in roughing out the profile is to trim off the top, outside corner of each blank. To do this, tilt saw blade to 45°. Then sneak up on layout line.*

MITER & SPLINE JOINT

After all the rough out work is complete, cut all three blanks in half. Then mark, and keep track of which pieces go together. This way, the grain on both sides of the front feet will match up and wrap around the corners.

MITERS & SPLINES. Usually ogee bracket feet had some type of mechanical reinforcement in the miter joint. For my feet, I used splines, refer to Step 9.

And because a desk like the Slant Front Desk is usually against a wall, only the four sections used for the front feet are mitered. The back feet are not mitered — they're supported with a gusset (bracket). (There's more about this gusset on page 29.)

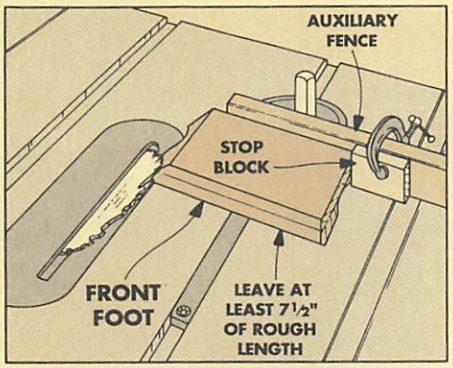

7 *With the profile roughed out, the next step is to cut all the blanks in half. After that's done, cut a miter on the four pieces that will be used for the front feet.*

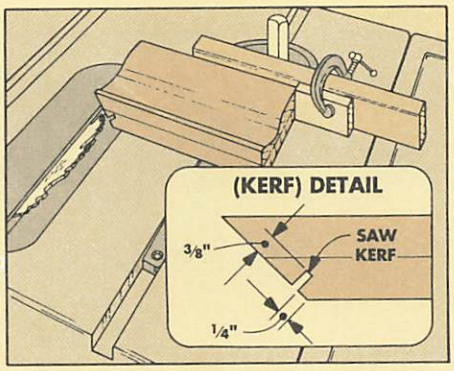

8 *Now cut a ⅜"-deep kerf in each mitered end for a spline. Position the groove ¼" from the inside face. This way, the spline will be hidden by molding.*

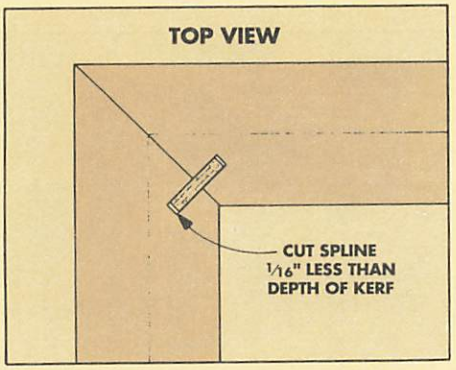

9 *Next cut splines from ⅛"-thick Masonite to fit across the kerfs. When cutting splines to width, cut them slightly undersize. This will make glue-up easier.*

SCALLOPED PROFILE

Now the blanks are ready to have the scalloped profile cut out of them. This fancy cutout makes each foot look like it has a large, overhanging bracket.

SCALLOPED PATTERN. Because the ogee profile is shaped on the front face of each blank, it's easier to lay out the scalloped pattern on the *back* of each blank. When tracing out the pattern, make sure you're using the correct reference line on the template for the front and back feet, see Steps 10 and 11.

Since I used a ½"-dia. drum sander chucked in the drill press to sand out the profile, I found it easier to sand the profile right after it was cut (rather than after the feet were glued-up into an L-shaped bracket). The individual sections of the front feet fit on the drill press table better than a large glued-up bracket.

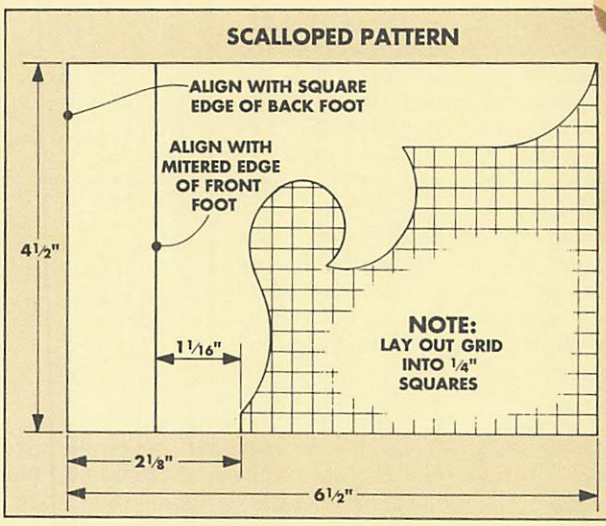

NOTE: CUT TEMPLATE FROM POSTERBOARD. COMPLETE FULL-SIZE PATTERNS AVAILABLE, SEE PAGE 31.

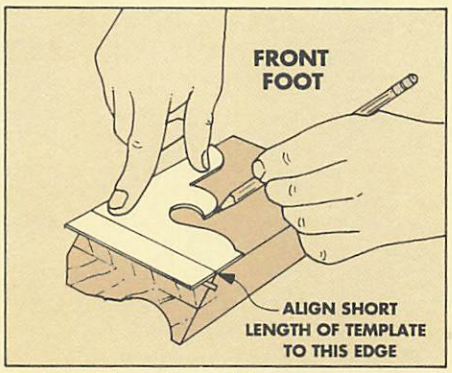

10 *Transfer scalloped pattern onto back side of mitered pieces. Then cut out scalloped shape. Next, remove saw blade marks with a ½"-dia. drum sander.*

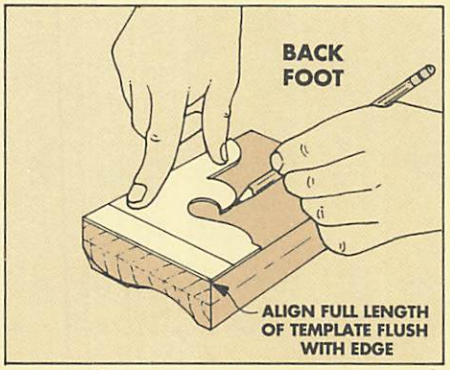

11 *Next, transfer scalloped pattern onto back feet. Make sure template is aligned with edge of workpiece. Then cut to shape and sand out saw blade marks.*

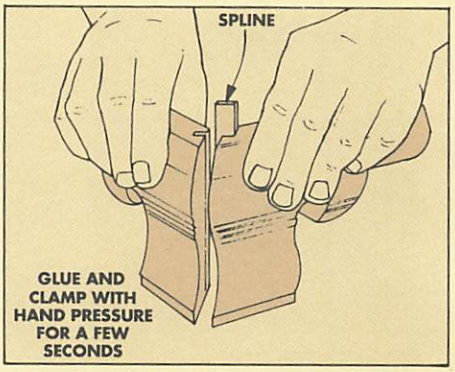

12 *After scallop is sanded, glue-up the L-shaped blanks for the front feet. After glue is dry, trim spline flush with the top and bottom of the foot.*

FINAL SHAPING & SMOOTHING

Up to this point, all the profile work has been rough shaping. I waited until now to do the final shaping and smoothing because of the miter joint on the front feet.

Had the individual blanks been shaped before they were glued up, there would have been a good chance the joint line would have wandered from side to side. To end up with a straight joint line, work both sides of the bracket, toward the glue line.

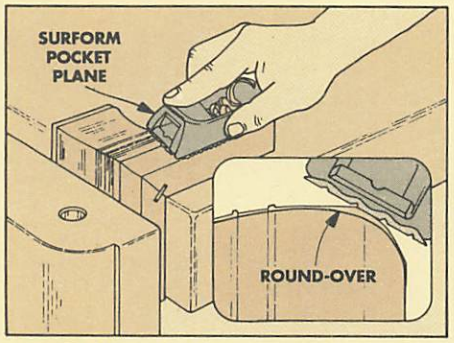

13 *Now the feet are ready for final shaping. Start by smoothing over the roughed out round-over on the top, outside corner of each foot.*

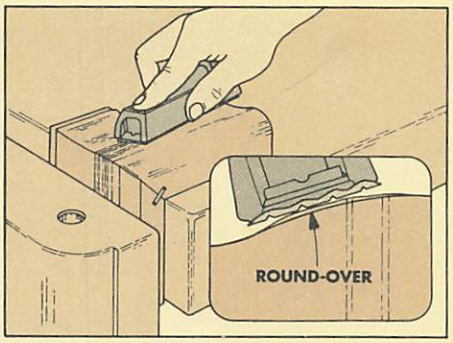

14 *To complete ogee profile, create a smooth transition between the round-over and cove. Enough waste should be removed to form a gentle curve.*

SANDING TIP

Sanding a contoured profile can be difficult. Power sanders won't work. And holding a piece of sandpaper in the palm of your hand doesn't provide even pressure. But sandpaper wrapped around a short length of plumbing insulation provides just the right amount of support and flexibility to sand most any shape.

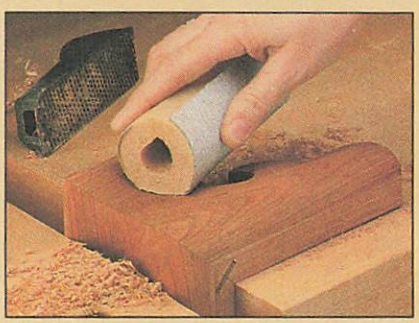

MOUNTING THE FEET

With the final shaping and sanding completed, the last step is to mount the feet to the bottom of the desk. And to do this, the first thing I did was lay the desk down on its back.

FRONT FEET. To provide a frame for mounting the front feet, I used two support cleats for each foot, see Step 15. First screw the cleats to the desk. Then screw the cleats to the feet, see Step 16.

After the front feet are in place, you'll probably notice the spline in the miter joint is exposed at the top. Don't worry about this. A strip of molding that's added later to dress up the bottom of the desk will cover the exposed splines.

BACK FEET. The back feet are mounted a little differently than the front feet. Since the back feet are only viewed from one side, I used a gusset (support bracket) to help hold each foot in place and offer additional support, refer to Step 22.

Shop Note: To lay out the gusset, I used the 45° angle on a combination square — working off a line drawn down the center of the workpiece, see Step 17.

Unlike the front, the back of the desk doesn't have a lip for attaching the cleats. So the cleats used to attach the back feet are slightly offset from one another, see Step 20.

Once the back cleats are screwed on, mount the back feet in place to complete the installation of the Ogee Bracket Feet, see Steps 21 and 22.

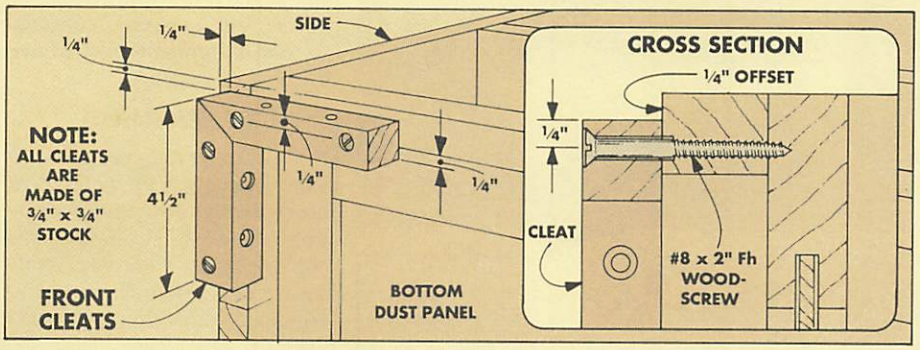

15 *Now, all the feet are ready to be mounted. The front feet are held in place by two mitered cleats. After the cleats are cut to size, drill pilot holes for mounting the cleats to the desk and the feet to the cleats. When drilling the holes for mounting the cleats to the desk, drill them slightly off center, see Cross Section above.*

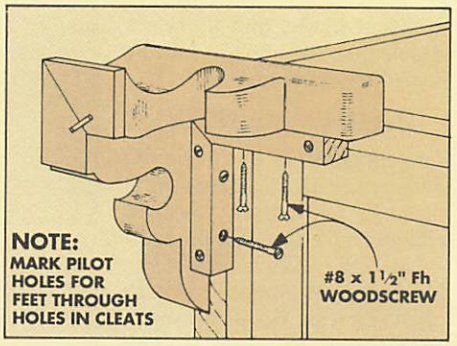

16 *Before screwing the front feet in place, first position them on the cleats. Then mark and drill pilot holes in the feet so the screws don't split the wood.*

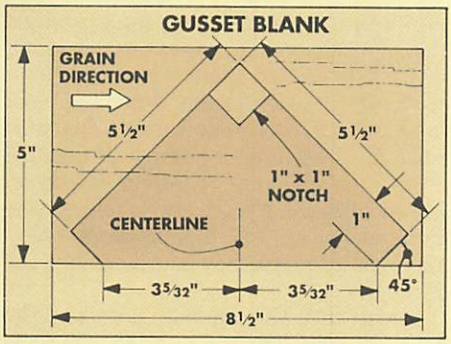

17 *The back feet are supported by two 3/4"-thick gussets. When laying out the gussets on the workpiece, make sure the grain is oriented for maximum strength.*

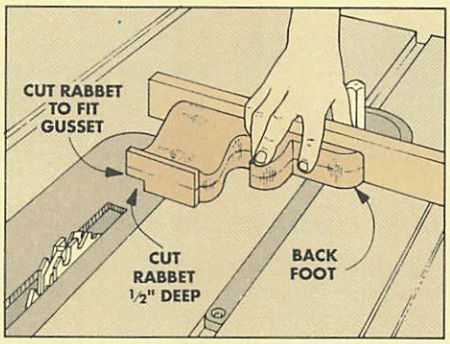

18 *Next, cut a rabbet on the back, inside edge of each back foot for the gusset. Sneak up on width of the rabbet to match thickness of gusset.*

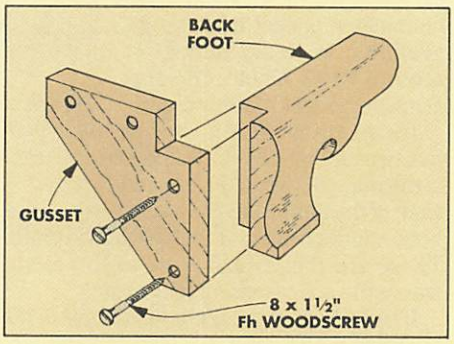

19 *Before screwing gussets to feet, mark where the pilot holes are to be drilled in the rabbet. Then drill the holes and screw the gusset in place.*

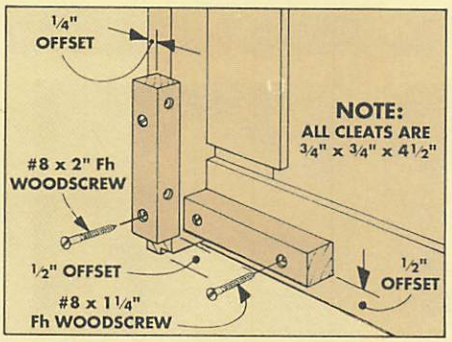

20 *Now cut 3/4"-square cleats for the back feet and gusset assemblies. The back cleats are positioned so gussets create 1/4"-wide ledge for the back panel.*

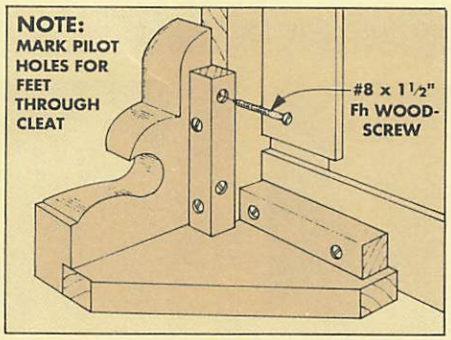

21 *Before screwing the back foot in place, position the foot against the cleats. Then mark and drill pilot holes in the foot so the screws don't split the wood.*

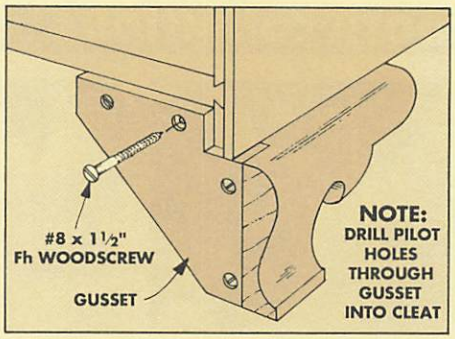

22 *To complete the installation of the back foot, first place the desk on the floor in the upright position. Then screw the gusset to the back cleat.*

Sharp Teeth

Before starting an heirloom project, I check my saw. It must be adjusted correctly for clean crosscuts. But a perfectly adjusted saw doesn't guarantee perfect cuts. That's the job of the crosscut blade, and there's a couple things to check. I start by inspecting the teeth.

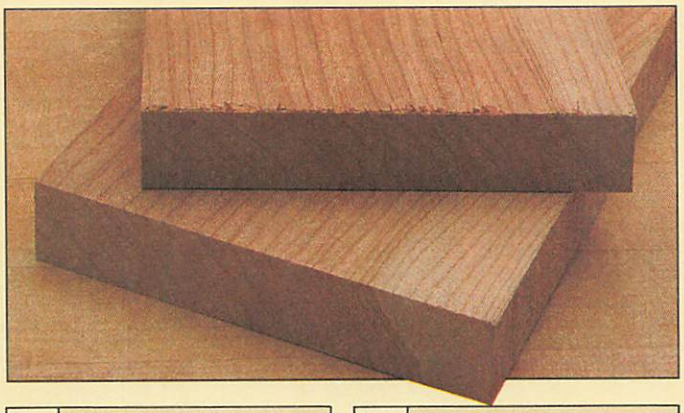

INSPECT THE TEETH

The condition of the teeth will determine if the blade cuts cleanly or leaves ragged, chipped-out edges, see photo.

No blade will cut well if the teeth are all gunked up with pitch and resin. So, if necessary, first clean the teeth. I soak blades in a pizza pan filled with commercial blade cleaner.

MAGNIFIER. When the blade is clean, use a magnifier to look closely at the teeth. (I use a 30X illuminated pocket microscope, available at Radio Shack for around $10.) Check the top, front, and edges of a few teeth.

TOOTH EDGES. Each tooth has two cutting edges. The first is the edge between the top and front of the tooth, and the second is the edge between the front and the side of the tooth. These are the critical parts of the tooth, where the actual cutting takes place.

If the edges of the teeth look ragged, it's probably time to have the blade sharpened. But just to be sure, make a test cut with the blade. If it's really dull, it will show up on the wood. So take a good close look at the cut.

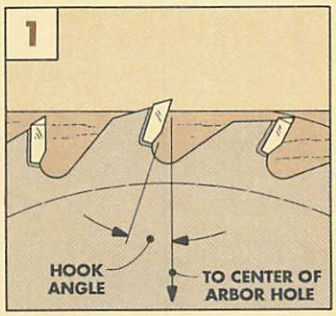

HOOK ANGLE. When the face of a tooth is sharpened, the same angle must be ground on all teeth.

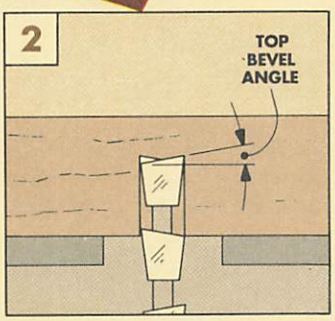

TOP BEVEL. Sharpening should maintain the top bevel on the teeth of a crosscut blade.

INSPECT THE CUT

A blade doesn't have to be brand new to cut well. More important is the look and feel of the cut-off piece. So I take a piece of scrap and cut a 3" piece off the end. If the teeth are sharp, there shouldn't be any chipout on any of the edges, see photo above.

Next, examine the cut-off end. The end should look shiny and feel like it's been sanded. Note: You can see this best when holding the end up to a bright incandescent light. If the blade is dull, you'll be able to see rough tooth marks or burns. And if the cut is unsatisfactory, it's probably best to have the blade sharpened.

SHARPENING

Not all sharpening services are alike. The key is the equipment used and the coarseness of the grinding wheel. The best results come from an automatic (computer controlled) machine equipped with a fine (up to 600-grit) grinding wheel.

The sharpening service I use grinds the face of each tooth in one operation, then the top of the tooth is ground in a second operation. Together, these grinding operations produce two sharp edges on each tooth, see last photo below.

TOOTH FACE. When the tooth face is ground, only a few thousandths of an inch of material should be removed. And an accurate sharpening process won't change the hook angle, see Fig. 1. This angle determines how aggressively (and smoothly) the blade will cut.

TOOTH TOP. The alternate bevels on the tops of the teeth must also be ground accurately, see Fig. 2. This step produces two fresh edges — the teeth should look as good as (or better than) the original factory grind.

TOOTH CONDITIONS

DIRTY. Dirty teeth don't cut efficiently, and the extra friction can cause burn marks on a cut.

CLEAN & DULL. When a blade is cleaned off, it's easier to see if the teeth need sharpening.

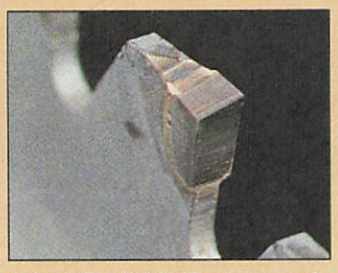

COARSE GRIND. A coarsely ground tooth won't cut as smoothly or stay sharp as long.

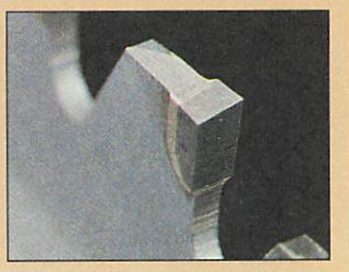

FINE GRIND. The sharpest — and longest lasting — edge comes from a fine-grit grinder.

Sources

COUNTRY COAT RACK

Woodsmith Project Supplies is offering a hardware and pattern kit for the Country Coat Rack on page 6. (Wood is not included.) We're also offering the full-size patterns and finishes separately, see below.

W86-786-100 Coat Rack Hardware/Pattern Kit..... $10.95

- (1 pair) Hinges, Solid Brass 1⅜" Open Width x 2" Long, with Mounting Screws
- (1) 1" Oak Knob and Screw
- (1) Magnetic Catch and Catch Plate, with Mounting Screws
- (6) Oak Shaker Pegs, 3½" Long, ½"-Dia. Tenon
- (10) ⅜" Flathead Oak Plugs
- (1) Full-Size Patterns of Back and Ends

PATTERNS. We're also offering separately a sheet of full-size patterns for the back and ends of the Country Coat Rack.

W86-8005-221 Country Coat Rack Patterns..... $3.50

SLANT FRONT DESK

Woodsmith Project Supplies is offering a hardware kit for the Slant Front Desk on page 16. (Wood is not included.) The kit includes enough full-size patterns (two views) for all of the ogee bracket feet.

We're also offering the full-size patterns and finishes separately, see next column.

W86-786-200 Slant Front Desk Hardware Kit with Ogee Bracket Feet Patterns..... $87.95

- (1 pair) Solid Brass Hinges, 2" Wide, 3 1/16" Open, with Screws
- (8) Solid Brass Pulls with Screws, 4¼" Overall Width
- (6) Solid Brass Drawer Knobs with Mounting Hardware
- (1) Solid Brass Back Plate for Door, with Escutcheon Pins
- (1) Full-Size, Two-View Patterns of Ogee Bracket Feet.

PATTERNS. We're also offering separately full-size patterns for the ogee bracket feet.

W86-8005-222 Ogee Bracket Foot Patterns..... $3.50

FINISHES

We stained the Coat Rack with Minwax's Golden Oak finish. It's available through retail stores and the catalogs listed below. After it dried we applied two coats of General Finishes Arm-R-Seal Oil (satin). **Woodsmith Project Supplies** is offering the Arm-R-Seal, see next column.

The Slant Front Desk was finished with one coat of General Finishes' Sealacell and four coats of Royal Finish (satin). We used almost two quarts of Royal Finish for the desk.

W86-4003-601 Sealacell Sealer (Clear) ..... $9.95 quart

W86-4003-602 Royal Finish Oil and Urethane Top Coat (Satin)..... $9.95 quart

W86-4003-620 Arm-R-Seal Oil and Urethane Top Coat (Satin) .....$9.95 quart

MILK PAINT. We finished the pine version of the Coat Rack shown on the back cover with Soldier Blue Milk Paint. **Woodsmith Project Supplies** is offering milk paint in a variety of colors. Each 6 oz. bag of powder will mix up a pint of paint.

W86-4001- Milk Paint (6 oz. bags of powder)

342 Bayberry.....$7.95
343 Oyster White.....$7.95
344 Barn Red.....$7.95
345 Soldier Blue.....$7.95
346 Lex. Green.....$7.95

ROUTER BITS

We used a variety of router bits to build the projects in this issue. **Woodsmith Project Supplies** is offering these high-quality, carbide-tipped bits. Order the shank size to fit your router.

W86-1514-643 ½" Straight Bit (¼" shank) $13.95
W86-1512-676 ½" Straight Bit (½" shank) $14.95
W86-1514-814 ¼" Round-Over Bit (¼" shank).....$23.95
W86-1512-823 ¼" Round-Over Bit (½" shank).....$24.95
W86-1514-817 ⅜" Round-Over Bit (¼" shank).....$24.95
W86-1512-826 ⅜" Round-Over Bit (½" shank).....$25.95
W86-1514-550 ½" Dovetail Bit (¼" shank) $15.95
W86-1514-400 ⅜" Rabbeting Bit (¼" shank) $24.95
W86-1512-450 ⅜" Rabbeting Bit (½" shank).....$26.95
W86-1514-885 Flush Trim Bit (¼" shank).....$15.95
W86-1512-887 Flush Trim Bit (½" shank).....$17.95

ROUND-OVER. When making the ogee bracket feet for the Slant Front Desk, we cut an angle off the top edge, and then filed it to a round-over, see pages 27 and 28. Another way of doing this is to use a ¾" round-over bit. (Available in ½" shank only.)

W86-1512-835 ¾" Round-Over Bit (½" shank) $44.95

MORTISING BIT

To cut the slot mortises for the divider between the door support and the top drawer on the Slant Front Desk, we used a mortising bit in the drill press.

W86-1505-647 ¼" Mortising Bit.....$8.95

SHARP TEETH

There are a lot of ways to clean saw blades and router bits. We've heard people use lye, oven cleaners, and a variety of household cleaners and chemicals. We think that the safest and best way to clean blades and bits is to use a "pitch and resin remover" that's designed just for that purpose. They're available from the sources listed below.

ORDER INFORMATION

BY MAIL

To order by mail, use the order form that comes with the current issue. The order form includes information on handling and shipping charges, and sales tax.

If the mail order form is not available, please call the toll free number at the right for more information on specific charges and any applicable sales tax.

BY PHONE

For fastest service use our Toll Free order line. Open Monday through Friday, 7:00 AM to 7:00 PM Central Time.

Before calling, have your VISA, MasterCard, or Discover Card ready.

1-800-444-7527

Note: Prices subject to change after June, 1993.

MAIL ORDER SOURCES

Similar hardware and supplies may be found in the following catalogs. Please call each company for a catalog or information.

Constantine's
800–223–8087
Coat Rack & Desk Hardware, Shaker Pegs, Plugs, Milk Paint, Router Bits

Craftsman Wood Service
800–543–9367
Coat Rack & Desk Hardware, Minwax

Van Dyke's
800–843–3320
Desk Hardware, Plugs, Shaker Pegs, Wood Knobs, Milk Paint

The Old-Fashioned Milk Paint Company
508–448–6336
Milk Paint

Woodcraft
800–225–1153
Shaker Pegs, Plugs, Router & Mortising Bits, Pitch & Resin Remover

Woodworker's Supply
800–645–9292
Shaker Pegs, Plugs, Desk Hardware, Pitch & Resin Remover, Router Bits

Woodworking Unlimited/Shopsmith
800–543–7586
Coat Rack & Desk Hardware, Shaker Pegs, Plugs, Pitch & Resin Remover, Router Bits

The Woodworkers' Store
612–428–3200
Coat Rack & Desk Hardware, Shaker Pegs, Plugs, General Finishes, Minwax, Router Bits, Pitch & Resin Remover

Final Details

Slant Front Desk

▲ *Pull-out door supports prop up the large writing surface. When not in use, they slide in flush with the front of the desk.*

▲ *The graceful curves on the ogee bracket feet don't require any hand carving — just ordinary shop tools and some sandpaper.*

Country Shelf

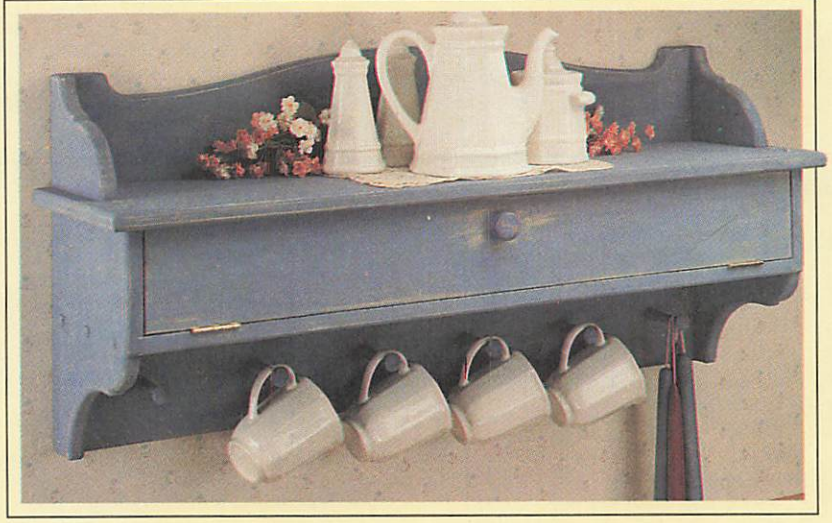

▲ *This country project can hold cups and linens as well as coats. Here, it's been painted with milk paint and distressed.*

Corduroy Cap

Keep the sun out of your eyes and the sawdust off your hair with the *Woodsmith* Cap. Made from heavy corduroy, it's ideal for both summer and winter wear. Embroidered with the *Woodsmith* logo. Made in U.S.A. One size fits all. Available in three colors.

Corduroy Cap
A4-701-401 Red. $7.95
A4-701-402 Blue. . . . $7.95
A4-701-403 Green. . . $7.95

Coffee Mug

For office, shop, or kitchen table, this heavy ceramic cup holds 10 oz. of coffee or your favorite beverage. The *Woodsmith* logo is silk-screened on both sides of the cup.

Each mug comes individually boxed. It makes a great gift for any woodworker. The *Woodsmith* mug is available in two colors: hunter green with tan logo, or egg-shell white with green logo.

Coffee Mug
A4-701-301 Green. $4.95
A4-701-302 White. $4.95

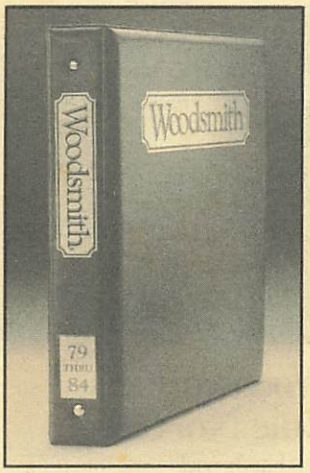

Woodsmith Custom Binder

This handsome binder has all the features you expect to find in a quality binder:

- Pocket inside for storing notes.
- Sheet lifters to protect your issues.
- Padded leather-like vinyl cover.
- Clear label sleeve for issue numbers on spine. (Pre-printed and blank labels included.)
- The *Woodsmith* logo gold-embossed on the front cover and on the spine.

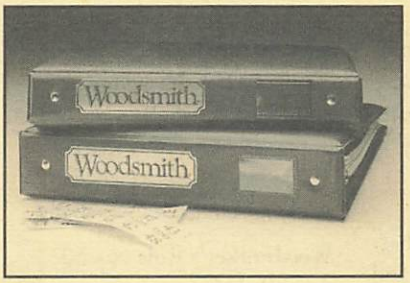

The *Woodsmith* Custom Binder is available in two sizes:
Standard: 1" snap rings that hold 1 year's issues.
Extra Large: 1½" snap rings that hold 2 years' issues.

A4-701-910 Standard Binder. . . .$7.95
A4-701-920 Extra Large Binder. .$8.95

(Order 2 or more binders and take $1 off the price of each.)

PHONE TOLL FREE 1-800-444-7002

1 Ordered By:

Remove label from front cover and place here.
(Correct if necessary.)
If label is missing, fill in No. 3 below.

2 Phone Nos.: ( ) _____ Home ( ) _____ Business

May we please have both telephone numbers so that we may reach you with any questions about your order — Thank you!

3 Ship To:
(If different from above label, or if label is missing.)

Recipient's Name

Company Name (if applicable)

Address Apt. No.

City State Zip

Is this a gift? ☐Yes ☐No

( ) Phone No. at this address

4 Method of Payment: ☐Personal Check ☐Money Order Enclosed Payable to Woodsmith.
☐Charge to my credit card: (Circle one)

MasterCard VISA DISCOVER

Account No. (fill in all digits shown on your card)

Expiration Date

Signature required if using credit card.

Woodsmith
PROJECT SUPPLIES

Order By Phone:
Toll Free: 1-800-444-7002
Hours CST: (Mon - Fri) 7AM - 7PM

Order By Mail - Send to:
P.O. Box 842
Des Moines, IA 50304

5 Fill Out Order Form Below:

Item No.	Qty.	Item Description	Price Each	Total Price
			Merchandise Total*	
			Shipping & Handling	
			TOTAL AMOUNT	

Packing, Shipping, & Guaranteed Delivery Charges

Merchandise Total:	Add:
Under $10	$3.50
$10.01 to $30	$4.50
Over $30	$5.50

Prices effective through 05/93.

*Iowa residents add 5% sales tax to merchandise total.

KEY: W32B-02EA

Shop Apron

This is one shop apron that can stand up to hard use. It's made from heavy-duty, 18 oz. cotton canvas. The edges are reinforced with white canvas piping that's sewn with nylon thread. All the stress points are reinforced with bar tacking.

The *Woodsmith* Shop Apron has three deep pockets at waist level and three chest pockets across the top. It's hunter green with a white *Woodsmith* logo. One size fits all.

Shop Apron
A4-701-201.....$14.95

100% Satisfaction Guarantee
If for any reason you're not completely satisfied with anything you purchase from Woodsmith Project Supplies, just return it for a replacement or a full 100% refund, whichever you want. No questions asked.

Woodworker's Rule No. 602

This handy pocket size rule (6" x ¾") is ideal for double checking measurements and setting the depth of a cut. Numerals are positioned vertically in the center of the scale for easy reading from both edges. The black graduation marks are etched into the body.

Woodworker's Rule No. 602
A4-701-116.....$9.95

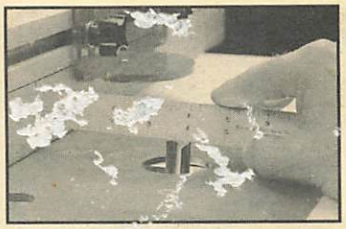

Woodworker's Rule No. 121

This is an exceptional 12" rule — designed just for woodworkers. The front can be read left-to-right or right-to-left. On the back is a center-finding scale and a 1/32" scale. The rule is finished with a special seven-step process that creates a non-reflective satin finish so it's easy to read in any kind of light. The black graduation marks are photochemically etched into the tempered steel body.

Woodworker's Rule No. 121
A4-701-121.....$16.95

Master Try Square

A try square that's just the right size — large enough to lay out a line a[illegible] most boards, yet small enough to fit [illegible]fortably in your shop apron pocket.

The [illegible]de is solid brass alloy, 6½" [illegible] and 1¼" wide. It's guaranteed square within 0.002" for the length of the blade and on both sides of the bl[illegible] the handle is North American Juara™ wood.

Master Try Square
A4-701-102.....$44.95

Specifications:
Woodworker's Rule No. 602
Hardened steel, Rockwell 52, C-scale. Photochemically etched markings.

Length	6"
Width	¾"
Thickness	0.040"
Graduations (fr.)	1/16" Vertical Reading (Left and right edges read the same.)
Graduations (bk.)	1/32" Vertical Reading (Left and right edges read the same.)

Specifications:
Woodworker's Rule No. 121
Hardened steel, Rockwell 52, C-scale. Photochemically etched markings.

Length	12"
Width	1"
Thickness	0.040"
Graduations (front)	1/16" Left-to-Right 1/16" Right-to-Left
Graduations (back)	1/32" Left-to-Right 1/16" Centering

Specifications:
Master Try Square
Accuracy: Guaranteed to be accurate inside and outside within 0.002" over the length of the blade.

Handle	Juara™ wood
Blade	Solid brass alloy
Blade Length	6½" (Outside handle)
Blade Length	5 3/16" (Inside handle)
Blade Width	1¼"

Using the Woodworker's Rule No. 121

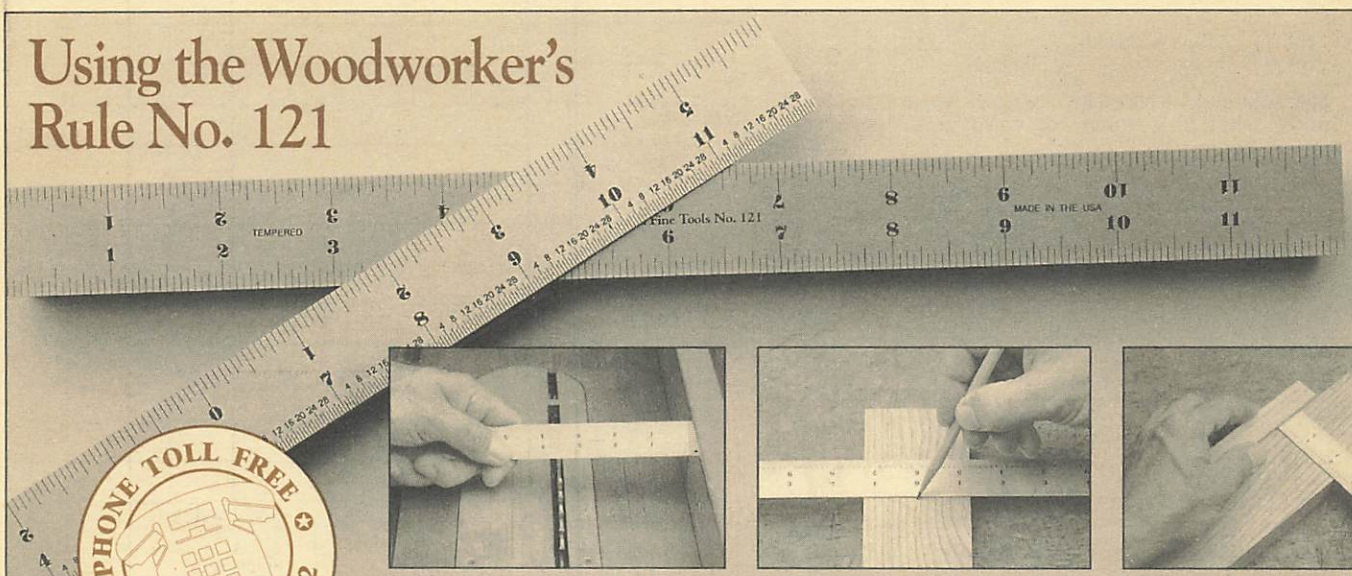

• This rule is especially handy when setting a table saw rip fence. With a Left-to-Right and a Right-to-Left scale with identical markings opposite each other, there's no way to read it wrong.

• To use the Center-Finding Scale, align the rule so the same measurement appears on the left and right side of the "0". Then the "0" indicates the exact center of your workpiece.

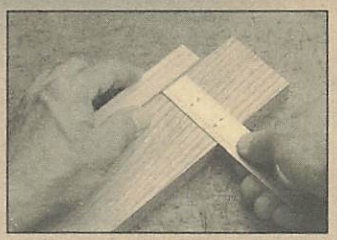

• To measure the exact width of a board, hold a block of wood against one edge and push the end of the rule against the block. For precise measurement, use the 1/32" scale on the back of the rule.